PAGE NO.	SH	TITLE	PART NO	EC NO.	FEATURE B/M OR B/MS
** LOGIC TYPE DIAGNOSTIC PROGRAMS 8					
03B0#		FUNCT TEST PROGRAM	2243965	420403	.W. 5889397
03B4*		PROG DECK	5889432	571152	.W. 5889397
0300#		DIAG MONITOR PROGRAM	2191201	571053	.W. 5889397
0304#		CONSOLE PRINTER PROGRAM	2191241	420317	.W. 5889397
0308#		2315 DISK INITIALIZATION PROGRAM	2191217	420403	.W. 5889454
0308#	1	2315 DISK PROGRAM	2191217	420403A	.W. 5889397
0309#	1	DISK STORAGE FUNCTION PROGRAM	2191213	571036C	.W. 2190930
032C*		PROG DECK	5889423	571154	.W. 5889397
032D*		PROG DECK	5889426	571154	.W. 5889397
**03A1		CPU FUNCTION PROGRAM	2191205	420403A	.W. 5889397
*03AA#		1442 LOADER TEST DECK	2191282	419643	.W. 5889397
*03AC#		RELOCATING LOADER PAPER TAPE	2191287	571021	.W. 5889454
*030B#		FUNCTION TEST PROGRAM	2191233	419643	.W. 5889454
*030F#	1	FUNCTION TEST DECK	2191225	419643	.W. 5889397
*032F#		TIMING TEST DECK	2191229	419643	.W. 5889397
**03A3#		DIAG LOADER	2191253	415490C	.W. 5889397
**03A5#		DT CARD PROGRAM	2191261	415490	.W. 5889397
**03B1#		FUNCT TEST PROGRAM	2243968	420403	.W. 5889397
***03A6#		STORAGE ADJ PROGRAM	2191245	420403	.W. 5889397
***03A8#		INTERR PROGRAM	2191269	420403	.W. 5889397
***030A#		DISK ADJ PROGRAM	2243958	571005	.W. 5889397
****03A0#		SCOPE LOOP PROGRAM	2243963	571053	.W. 5889397
****0302*		1130 DIMAL PROGRAM	2243960	420403A	.W. 5889454
****0302#		DIMAL PROGRAM	2243960	420403A	.W. 5889397

TABLE OF CONTENTS VOL#001 FOR 1131 C00 -20655 MODE P4 RQST BY 03096 6 22 VB<* DATE 07JUN73

PAGE NO.	SH	TITLE	PART NO	EC NO.	FEATURE B/M OR B/MS
** LOGIC TYPE SYSTEM DIAGRAMS 0					
AC003		SOCKET LISTING 2 PAGES	5889391	571150	.W. 5889400
AC004		SOCKET LISTING 2 PAGES	5889392	571154	.W. 5889400
AC005		SOCKET LISTING 2 PAGES	5889393	571150	.W. 5889400
AD000		TIE DNS ADJMENTS AND GENERAL INFO	5889418	571156	.W. 5889400
AE000	1	SIGNAL CABLING	5889419	571155	.W. 5889400
BA101		CE CARD	5889189	571150	.W. 5889400
BB101		I/O BUS BITS 0-1-2	5889455	571155	.W. 5889454
BB111		I/O BUS BITS 3-4-5	5889456	571155	.W. 5889454
BB121		I/O BUS BITS 6-7-8	5889457	571155	.W. 5889454
BB131		I/O BUS BITS 9-10-11-12	5889458	571155	.W. 5889454
BB141		I/O BUS BITS 13-14-15	5889459	571155	.W. 5889454
DN101		OP DECODE NO. 1	5889195	571150	.W. 5889400
DN111		OP DECODE NO. 2	5889196	571150	.W. 5889400
DN201		XIO GATES X CLOCK ADV PROG TRACE	5889197	571150	.W. 5889400
DU101		FUNC DECODE & ENT GT	5889460	571155	.W. 5889454
DU111		AREA DECD & SENSE REST	5889461	571155	.W. 5889454
DU121		U REGISTER POWERING	5889200	571150	.W. 5889400
FA171		CHAN INTRPT ENT	5889462	571156	.W. 5889454
FA191		CHANNEL ILSW ASSEMBLY	5889202	571150	.W. 5889400
KA101		OSC PHASE A SPD RUN T CLOCK ADV	5889203	571154	.W. 5889400
KA111		PHASE A&B RESET	5889463	571155	.W. 5889454
KB101		BR1-BR2 A-M SAMPLE M-I SAMPLE	5889205	571150	.W. 5889400
KB111		SKIP SAMP BR OUT ADD STOR INTLK	5889206	571150	.W. 5889400
KC101		T CLOCK T 0 T1 T2 T3 T 0123	5889207	571150	.W. 5889400
KC111		T CLOCK T4 T5 T6 T7	5889208	571154	.W. 5889400
KD101		CYCLE TIMER I1 I2 IX	5889209	571150	.W. 5889400
KD111		CYCLE TIMER IA E E1 E3	5889210	571150	.W. 5889400
KG101		A-M AND I-M SAMPLE PULSE DRIVERS	5889211	571150	.W. 5889400
KG111		CLK ADV M-I B-I PH A SAMP PUL DR	5889212	571150	.W. 5889400
KG121		I/O-B A-B I-B SAMPLE PULSE DRIVER	5889213	571150	.W. 5889400
KG131		A-U U-A XCHG A+Q SAMPLE PU DRIVER	5889214	571150	.W. 5889400
KG141		SHIFT LEFT A/Q SAMPLE PULSE DRIVR	5889215	571150	.W. 5889400
KG151		RESET D AND SAMPLE PULSE DRIVERS	5889216	571150	.W. 5889400
KG201		I INCREMENTER	5889217	571150	.W. 5889400
KG211		B-I M-I ANDI INC GATE I-M/A-M GT	5889218	571154	.W. 5889400
KG221		T 7 C C C CONTROLS	5889219	571150	.W. 5889400
KG231		I-A / B-D GATE A-U / U-A SAMPLE	5889220	571150	.W. 5889400
KG241		STX T 00 MDX DBL PREC E2	5889221	571150	.W. 5889400
KG251		B BIT 0 LATCHED	5889222	571150	.W. 5889400
KM101		X CLOCK	5889223	571150	.W. 5889400
KM111		X CLOCK	5889224	571150	.W. 5889400
KM201		INTRPT ENT	5889464	571155	.W. 5889454
KM211		CYCLE STEAL LEVELS 0 AND 1	5889226	571150	.W. 5889400
KM212		T 7 EXTEND	5889227	571150	.W. 5889400
KM301		INTERRUPT LEVELS 0 AND 1	5889228	571150	.W. 5889400
KM311		INTERRUPT LEVELS 2 AND 3	5889229	571150	.W. 5889400
KM321		INTERRUPT LEVELS 4 AND 5	5889230	571150	.W. 5889400
KR101		PARITY CHECK	5889231	571150	.W. 5889400
KR111		PARITY BIT TRIGRS	5889465	571155	.W. 5889454
KS101		CARRY TEMP CARRY DBL PR CARRY	5889233	571150	.W. 5889400
KS111		OVERFLOW SKIP COND	5889234	571150	.W. 5889400
KT101		LIKE SIGNS REM OK	5889235	571150	.W. 5889400
KT111		ARITHMETIC SIGN AND ADD	5889236	571150	.W. 5889400
KT121		MPY E SHIFT CTRL ARITH CTRL	5889237	571150	.W. 5889400
KT131		ZERO REMAINDER SET DIV OFLO	5889238	571150	.W. 5889400
KT201		SHIFT LT ENTR SET ARITH CTRL	5889239	571150	.W. 5889400
KT301		SHIFT OP GATE SET DIV OFLO	5889240	571150	.W. 5889400
KT311		RESET ACC I CYCLE IAR INCR	5889241	571150	.W. 5889400
KT321		CONSIG INTERGTS	5889466	571155	.W. 5889454
KT331		CLOCK ADV SPD END OP TO SPD	5889243	571150	.W. 5889400
KU101		ACCUM-A REG = 0 ARITH FAC D = 0	5889244	571150	.W. 5889400
KU111		ACC INPUT BUSS CARRY OVERFLOW	5889245	571150	.W. 5889400
KU201		INDEX ADDR STOP LATCH DIV COUNT	5889246	571150	.W. 5889400
KU211		T&X CLK A PROG LD PWR	5889467	571155	.W. 5889454
KU301		NOT TAG 00 SLC RESET CARRY	5889248	571150	.W. 5889400
KU311		REG RST PARITY CHK CONT GA	5889468	571155	.W. 5889454
KW101		PROC USAGE METERS CNTRL	5889469	571155	.W. 5889454
MB101		STORAGE ADDR BUS	5889251	571150	.W. 5889400
MB111		STORAGE ADDRESS ASSEMBLY	5889252	571150	.W. 5889400
MB201		FILE PRINTER ADDR BUS	5889253	571150	.W. 5889400
MC101		STORAGE SELECT AND USE	5889254	571150	.W. 5889400

TABLE OF CONTENTS VOL#002 FOR 1131 C00 -20655 MODE P4 RQST BY 03096 6 22 VB<* DATE 07JUN73

PAGE NO.	SH	TITLE	PART NO	EC NO.	FEATURE B/M OR B/MS
** LOGIC TYPE		SYSTEM DIAGRAMS 0			
RA101		A AND U REGISTERS BIT 0	5889255	571150	.W. 5889400
RA111		A AND U REGISTERS BIT 1	5889256	571150	.W. 5889400
RA121		A AND U REGISTERS BIT 2	5889257	571150	.W. 5889400
RA131		A AND U REGISTERS BIT 3	5889258	571150	.W. 5889400
RA141		A AND U REGISTERS BIT 4	5889259	571150	.W. 5889400
RA151		A AND U REGISTERS BIT 5	5889260	571150	.W. 5889400
RA161		A AND U REGISTERS BIT 6	5889261	571150	.W. 5889400
RA171		A AND U REGISTERS BIT 7	5889262	571150	.W. 5889400
RA201		A AND U REGISTERS BIT 8	5889263	571150	.W. 5889400
RA211		A AND U REGISTERS BIT 9	5889264	571150	.W. 5889400
RA221		A AND U REGISTERS BIT 10	5889265	571150	.W. 5889400
RA231		A AND U REGISTERS BIT 11	5889266	571150	.W. 5889400
RA241		A AND U REGISTERS BIT 12	5889267	571150	.W. 5889400
RA251		A AND U REGISTERS BIT 13	5889268	571150	.W. 5889400
RA261		A AND U REGISTERS BIT 14	5889269	571150	.W. 5889400
RA271		A AND U REGISTERS BIT 15	5889270	571150	.W. 5889400
RB101		I B AND M REGISTERS BIT 0	5889271	571150	.W. 5889400
RB111		I B AND M REGISTERS BIT 1	5889272	571150	.W. 5889400
RB121		I B AND M REGISTERS BIT 2	5889273	571150	.W. 5889400
RB131		I B AND M REGISTERS BIT 3	5889274	571150	.W. 5889400
RB141		I B AND M REGISTERS BIT 4	5889275	571150	.W. 5889400
RB151		I B AND M REGISTERS BIT 5	5889276	571150	.W. 5889400
RB161		I B AND M REGISTERS BIT 6	5889277	571150	.W. 5889400
RB171		I B AND M REGISTERS BIT 7	5889278	571150	.W. 5889400
RB201		I B AND M REGISTERS BIT 8	5889279	571150	.W. 5889400
RB211		I B AND M REGISTERS BIT 9	5889280	571150	.W. 5889400
RB221		I B AND M REGISTERS BIT 10	5889281	571150	.W. 5889400
RB231		I B AND M REGISTERS BIT	5889282	571150	.W. 5889400
RB241		I B AND M REGISTERS BIT 12	5889283	571150	.W. 5889400
RB251		I B AND M REGISTERS BIT 13	5889284	571150	.W. 5889400
RB261		I B AND M REGISTERS BIT 14	5889285	571150	.W. 5889400
RB271		I B AND M REGISTERS BIT 15	5889286	571150	.W. 5889400
RB301		B REG PWRG BITS 0-7	5889470	571155	.W. 5889454
RB311		B REG PWRG BITS 8-15	5889471	571155	.W. 5889454
RB321		B POWER TERMINATORS	5889289	571150	.W. 5889400
RD101		D REGISTER BITS 0 AND 1	5889290	571150	.W. 5889400
RD111		D REGISTER BITS 2 AND 3	5889291	571150	.W. 5889400
RD121		D REGISTER BITS 4 AND 5	5889292	571150	.W. 5889400
RD131		D REGISTER BITS 6 AND 7	5889293	571150	.W. 5889400
RD141		D REGISTER BITS 8 AND 9	5889294	571150	.W. 5889400
RD151		D REGISTER BITS 10 AND 11	5889295	571150	.W. 5889400
RD161		D REGISTER BITS 12 AND 13	5889296	571150	.W. 5889400
RD171		D REGISTER BITS 14 AND 15	5889297	571150	.W. 5889400
RN101		OP FORMAT TAG REGISTER	5889298	571150	.W. 5889400
RN111		MOD 8 MOD 9 WAIT OP DBL WORD ADDR	5889299	571150	.W. 5889400
RQ101		Q REGISTER BITS 0 AND 1	5889300	571150	.W. 5889400
RQ111		Q REGISTER BITS 2 AND 3	5889301	571150	.W. 5889400
RQ121		Q REGISTER BITS 4 AND 5	5889302	571150	.W. 5889400
RQ131		Q REGISTER BITS 6 AND 7	5889303	571150	.W. 5889400
RQ141		Q REGISTER BITS 8 AND 9	5889304	571150	.W. 5889400
RQ151		Q REGISTER BITS 10 AND 11	5889305	571150	.W. 5889400
RQ161		Q REGISTER BITS 12 AND 13	5889306	571150	.W. 5889400
RQ171		Q REGISTER BITS 14 AND 15	5889307	571150	.W. 5889400
RS101		CYCLE CONTROL COUNTER 1 - 2	5889308	571150	.W. 5889400
RS111		CYCLE CONTROL COUNTER 4 8	5889309	571150	.W. 5889400
RS121		CYCLE CONTROL COUNTER 16 32	5889310	571150	.W. 5889400
WF391		FILE - PROCESSOR INTERFACE	5889311	571150	.W. 5889400
WZ011		SJ - 4 STORAGE INTERFACE	5889312	571150	.W. 5889400
WZ021		SJ - 4 STORAGE INTERFACE	5889313	571150	.W. 5889400
WZ031		SJ - 4 STORAGE INTERFACE	5889314	571150	.W. 5889400
WZ041		SJ - 4 STORAGE INTERFACE	5889315	571150	.W. 5889400
WZ051		SJ - 4 STORAGE INTERFACE	5889316	571150	.W. 5889400
WZ061		SJ - 4 STORAGE INTERFACE	5889317	571150	.W. 5889400
03AC		RELOCATING RELOADER PT DESCRIPT	2191288	571005	.W. 5889397
*03AC-		RELOCATING RELOADER PT LISTING	2191286	571021	.W. 5889397
030B		1134/1055 FUNCTION DESCRIPTION	2191234	420317	.W. 5889397
*030B-		1134/1055 FUNCTION LISTING	2191232	419643	.W. 5889397

TABLE OF CONTENTS VOL#003 FOR 1131 C00 -20655 MODE P4 RQST BY 03096 6 22 VB<* DATE 07JUN73

PAGE NO.	SH	TITLE	PART NO	EC NO.	FEATURE B/M OR B/MS
** LOGIC TYPE SYSTEM DIAGRAMS 0					
AC002		SOCKET LISTING	5889485	571156	.W. 5889454
XC101		CONSOLE DSW/ DATA BIT 0 2 4 6	5889318	571150	.W. 5889400
XC111		CONSOLE DSW/ DATA BIT 8 10 1214	5889319	571150	.W. 5889400
XC121		CONSOLE DSW/ DATA BIT 1 3 5 7	5889320	571150	.W. 5889400
XC131		CONSOLE DSW/ DATA BIT 9 11 1315	5889321	571150	.W. 5889400
XC141		PROG LD RST	5889472	571155	.W. 5889454
XF011		CE INDICATORS DISK STATUS	5889323	571150	.W. 5889400
XF021		CE INDICATORS DISK W/O BIT 7-15	5889324	571150	.W. 5889400
XF101		FILE SHIFT-COUNTER-LOAD WD-FILE	5889325	571150	.W. 5889400
XF111		B REGISTER INVERTERS	5889326	571150	.W. 5889400
XF121		FILE R/W SEL R/W REQ	5889327	571150	.W. 5889400
XF131		FILE R/W COND WR SYNC CTR GATE	5889328	571150	.W. 5889400
XF141		FILE SHIFT GATE REG INPUT TGR	5889329	571150	.W. 5889400
XF151		FILE ERROR FILE RESET	5889330	571150	.W. 5889400
XF161		FILE WRITE DATA - COUNTER GATE	5889331	571150	.W. 5889400
XF171		FILE ACCESS GO SETTLE S S	5889332	571150	.W. 5889400
XF181		FILE SECTOR COUNTER	5889333	571150	.W. 5889400
XF191		FILE HEAD SELECT ACCESS DIRECT	5889334	571150	.W. 5889400
XF201		FILE WORD COUNT REGISTER MODE	5889335	571150	.W. 5889400
XF211		FILE WORD COUNT REGISTER	5889336	571150	.W. 5889400
XF221		FILE CORE ADDR REGISTER BIT9-15	5889337	571150	.W. 5889400
XF231		FILE CORE ADDR REGISTER 1-8	5889338	571150	.W. 5889400
XF241		FILE BIT COUNTER	5889339	571150	.W. 5889400
XF251		FILE CHECK COUNTER	5889340	571150	.W. 5889400
XF261		FILE INPUT ASM BITS 0 - 7	5889341	571150	.W. 5889400
XF271		FILE INPUT ASM BITS 8 - 15	5889342	571150	.W. 5889400
XF301		FILE DATA REGISTER BIT 0-3	5889343	571150	.W. 5889400
XF311		FILE DATA REGISTER BIT 4-7	5889344	571150	.W. 5889400
XF321		FILE DATA REGISTER BIT 8-11	5889345	571150	.W. 5889400
XF331		FILE DATA REGISTER BIT 12-15	5889346	571150	.W. 5889400
XG101		PLOTTER DRUM-CARR DRIVE 1-2	5889347	571150	.W. 5889400
XG111	1	PLOTTER PEN DRIVE RESPONSE 3-4	5889348	571150	.W. 5889400
XK101		KBD SELECT GATE SS1 SS2 INT LVL 4	5889349	571150	.W. 5889400
XK111		KBD RESTORE TGR MANUAL INTERRUPT	5889350	571150	.W. 5889400
XP101		PRINTER CARR CONTROLS METER SEL	5889351	571150	.W. 5889400
XP111		CARRIAGE CHANNEL LATCH	5889352	571150	.W. 5889400
XP121		PRINTER RUN - READY CONTROLS	5889353	571153	.W. 5889400
XP131		PRINTER DISC CLOCK SS-C S CONTROL	5889354	571153	.W. 5889400
XP141		PRINTER ADDR REG - GROUP DECODE	5889355	571150	.W. 5889400
XP201		PRINTER INTERRUPT - ERROR	5889356	571153	.W. 5889400
XP211		PRINTER BUFFER REGISTER BIT 0-7	5889357	571150	.W. 5889400
XP221		PRINTER BUFFER REGISTER BIT 8-15	5889358	571150	.W. 5889400
XP301		PRINTER INPUT BLS BITS 0-3	5889359	571150	.W. 5889400
XP311		PRINTER INPUT BLS BITS 4-7	5889360	571150	.W. 5889400
XP321		PRINTER INPUT BLS BITS 8-15	5889361	571150	.W. 5889400
XP331		PRINTER ENTRY	5889362	571150	.W. 5889400
XP341		PRINTER EXIT	5889363	571153	.W. 5889400
XT101		P T PROG LD	5889474	571155	.W. 5889454
XT111		P T PROG LD BF BITS 0-3	5889475	571155	.W. 5889454
XT121		P T PROG LD BF BITS 8-11	5889476	571155	.W. 5889454
XT201		PAP TPE PU	5889477	571155	.W. 5889454
XT211		PAP TPE PU DR 1-A-B-8	5889478	571155	.W. 5889454
XT221		P T PUN BF DR 2-4-8-C	5889479	571155	.W. 5889454
XT231		P T PUN CNTRL	5889480	571155	.W. 5889454
XT301		P T RD2 CLU DR READY BUSY RESP	5889481	571156	.W. 5889454
XT311		P T RD CTS 1-2-4-8	5889482	571155	.W. 5889454
XT321		P T RD CTS A-B-C-8	5889483	571155	.W. 5889454
XT331		P T RD OSC&CNTRL	5889484	571155	.W. 5889454
XW101		TWR BUFFER LOAD TWR INTLK	5889385	571150	.W. 5889400
XW111		TWR RESET RESPONSE CASE	5889386	571150	.W. 5889400
XW121		CRLFT INTLK INTERLOCK LATCH	5889387	571150	.W. 5889400
XW211		TWR DRIVE SEL	5889388	571150	.W. 5889400
XW221		DRIVE SEL RIB SHIFT PRINT INTLK	5889389	571150	.W. 5889400

TABLE OF CONTENTS VOL#004 FOR 1131 C00 -20655 MODE P4 RQST BY 03096 6 22 VB<* DATE 07JUN73

PAGE NO.	SH	TITLE	PART NO	EC NO.	FEATURE B/M OR B/MS
** LOGIC TYPE SYSTEM DIAGRAMS		0			
AA101		SYSTEM DATA FLOW	2201356	419675	.W. 5889400
AA201		1131 DATA FLOW SWITCH LOGIC	2201360	419675	.W. 5889400
AA211		1131 DATA FLOW ADDR & STOR CTRL	2201361	419675	.W. 5889400
AA221		1131 DATA FLOW ARITH & BR CONTROL	2201362	415480D	.W. 5889400
AA231		1131 DATA FLOW I/O INT CS	2201363	419675	.W. 5889400
AA601		EFFECTIVE ADDRESS CYCLE SEQ 8 PGS	2201425	419675	.W. 5889400
AA611		INTERRUPT FORCED BRANCH 2 PAGES	2201432	415483A	.W. 5889400
AA621		OP CODE 0001 EXECUTE I/O	2201435	415483A	.W. 5889400
AA631		OP CODE 0010 SHIFT LEFT 2 PAGES	2201437	415483A	.W. 5889400
AA632		OP CODE 0011 SHIFT RIGHT	2201438	415480D	.W. 5889400
AA641		OP CODE 00100 LOAD STATUS	2201440	415480D	.W. 5889400
AA642		OP CODE 00101 STORE STATUS	2201441	415480D	.W. 5889400
AA651		BRANCH & STORE INSTRUCTION CTRL	2201443	415480D	.W. 5889400
AA652		BR OR SKIP ON CONDITION	2201444	415480D	.W. 5889400
AA661		LOAD INDEX	2201446	415480D	.W. 5889400
AA662		STORE INDEX	2201447	415480D	.W. 5889400
AA663		OP CODE 01110 MODIFY INDEX 4 PGS	2201448	419675	.W. 5889400
AA671		ADD OR SUBTRACT	2201450	419675	.W. 5889400
AA672		OP CODE 10001 DBL PRECISION ADD	2201451	419675	.W. 5889400
AA673		OP CODE 10100 MULTIPLY 2 PAGES	2201452	419675	.W. 5889400
AA674		OP CODE 10101 DIVIDE 3 PAGES	2201453	419675	.W. 5889400
AA681		LOAD ACCUMULATOR	2201455	415480D	.W. 5889400
AA682		DOUBLE LOAD	2201456	415483A	.W. 5889400
AA683		STORE ACCUMULATOR	2201457	415480D	.W. 5889400
AA684		DOUBLE STORE	2201458	415483A	.W. 5889400
AA691		LOGICAL AND OR EXCLUSIVE	2201460	415483A	.W. 5889400
AA701		TIMING CHART 11 CYCLE	2201299	419675	.W. 5889400
AA711		TIMING CHART MDX	2201338	419675	.W. 5889400
AA721		TIMING CHART XIO	2201297	419675	.W. 5889400
AA731		TIMING CHART BSC	2201340	419675	.W. 5889400
AA741		TIMING CHART SLA	2201341	419675	.W. 5889400
AA751		TIMING CHART SLCA	2201339	419675	.W. 5889400
XF401		DISK FILE/UNIT DATA CONTROL	2201241	415480E	.W. 5889400
XF501		DISK FILE/UNIT OPERATION	2201242	419675	.W. 5889400
XF511		DISK FILE/READ OPERATION	2201243	419675	.W. 5889400
XF521		DISK FILE/CONTROL OP ACCESS	2201244	419675	.W. 5889400
XF701		MODIFY INDEX & SKIP FORMAT-0	2201245	419675	.W. 5889400
XF711		DISK FILE READ TIMING	2201246	419675	.W. 5889400
XF721		DISK FILE ACCESS TIMING	2201247	419675	.W. 5889400
XG501		PLOTTER WRITE OP	2201248	419675	.W. 5889400
XG701		TIMING CHART 11 CYCLE	2201249	415480E	.W. 5889400
XK501		KEYBOARD READ PLUS CONTROL OPS	2201250	419675	.W. 5889400
XK701		KEYBOARD READ & CONTROL TIMING	2201251	415483A	.W. 5889400
XP401		PRT UNIT DATA & CONTROL DIAGR	2201253	419675	.W. 5889400
XP501		PRINTER WRITE OP-EMITTER PRINTER	5889420	571153	.W. 5889400
XP511		PRINTER CONTROL OP	2201255	419675	.W. 5889400
XP701		PRINTER WRITE TIMING	5889421	571153	.W. 5889400
XP706		TIMING CHART	5889448	571153	.W. 5889400
XP711		PRINTER CONTROL TIMING-START-STOP	5889434	571153	.W. 5889400
XR401		CARD READ/PUNCH UNIT DATA CONTROL	2201258	415480E	.W. 5889400
XR501		CARD READ/PUNCH WRITE OP	2201259	419675	.W. 5889400
XR511		CARD READ/PUNCH READ OP	2201260	419675	.W. 5889400
XR521		CARD READ/PUNCH PROGRAM LOAD OP	2201261	415480E	.W. 5889400
XR531		CARD READ/PUNCH CONTROL OP	2201262	419613	.W. 5889400
XR541		CARD READ/PUNCH CONTROL OP	2201263	415480E	.W. 5889400
XR701		CARD READ/PUNCH WRITE TIMING	2201264	419675	.W. 5889400
XR711		CARD READ/PUNCH READ/PROGRAM LOAD	2201265	419675	.W. 5889400
XR721		CARD READ/PUNCH CONTROL TIMING	2201266	415480E	.W. 5889400
XW401		CONSOLE PRINTER UNIT DATA	2201273	419675	.W. 5889400
XW501		CONSOLE PRINTER WRITE AND CONTROL	2201274	419675	.W. 5889400
XW701		CONSOLE PRINTER WRITE AND CONTROL	2201275	415480E	.W. 5889400
YP001	2	POWER SUPPLY LAYOUT 50 AND 60HZ	2201315	415777H	.W. 2190560
YP002	1	PHYSICAL LAYOUT SEQ BX 50&60 HZ	2201316	419610B	.W. 2190560
YP003	1	3V 8A & 3V 16A PWR SUP 50&60 HZ	2201328	419610B	.W. 2190560
YP004	1	6V 12A POWER SUPPLY 50 & 60 CYCLE	2201317	419610A	.W. 2190560
YP005	1	3V & 6 AMPLIFIER CARDS 50&60 CYLE	2201318	415480E	.W. 2190560
YP006		12V POWER SUPPLY 50&60 CYCLE	2201319	420313	.W. 2197254
YP007	1	48V POWER SUPPLY 50 & 60 HERTZ	2201320	419610B	.W. 2190560
YP008	1	LOGIC VOLTAGE SENSE 50/60 CYCLE	2201000	420414	.W. 2190560
YP101		115VOLT.AC DIST - MPS 60HZ	2201321	420364	.W. 2190560
YP111	1	AC VOLT DISTR SEQ BOX&BLWRS 60 HZ	2201322	420319	.W. 2190560
YP121	1	PWR SUP +6 +3 & -3V DC 50/60 HZ	2201323	419610B	.W. 2190560
YP131	4	PWR SUP.48V & 12V 50 & 60 HZ	2201324	420364	.W. 2190560
YP141	7	D.C.VOLTAGE DISTRIBUTION	2201325	420327	.W. 2190560
YP151	1	B GATE DC VOLT DISTR MPS	2201326	420442	.W. 2190560
YP161		A GATE DC VOLTAGE DISTR	5889438	571155	.W. 5889400
ZA101		I/O SIGNAL FEED THROUGH	2201309	420325	.W. 5889400
ZB101	1	I/O POWER DISTRIBUTION	2201312	420364	.W. 2190560
ZK101		KEYBOARD LOGIC	2201300	420364	.W. 5889400
ZK111	1	KEYBOARD SW & LIGHT PANEL	2201301	420364	.W. 2190560
ZK121		KEYBOARD CONT DECODE DOMESTIC KBD	2201302	415709G	.W. 2191439
ZL101		LIGHT PANEL COLLECTOR LISTING	2231565	571037	.W. 5889400

PAGE NO.	SH	TITLE	PART NO	EC NO.	FEATURE B/M OR B/MS
** LOGIC TYPE SYSTEM DIAGRAMS		0			
ZL111		LIGHT PANEL	2201304	571003	.W. 5889400
ZS101	1	BIT SWITCH AND LIGHT LOGIC	2201305	420364	.W. 2190560
ZW101		CONSOLE PRINTER	2201308	571003	.W. 5889400

TABLE OF CONTENTS VOL#A00 FOR 1131 C00 -20655 MODE P4 RQST BY 03096 6 22 VB<* DATE 07JUN73

PAGE NO.	SH	TITLE	PART NO	EC NO.	FEATURE B/M OR B/MS
** LOGIC TYPE SHIPPING GROUP		3			
0009092	01	WASHER	0000003	571150	.W. 5889397
0026299	01	SCREW	0000003	571150	.W. 5889397
0130987	01	LOCKWASHER LEVELER	0000010	571150	.W. 5889397
0159494	15	KICKSTRIP SCREWS	0000010	571150	.W. 5889397
0205331	01	JUMPER	0000003	571150	.W. 5889397
0222836	02	BINDER	0000003	571150	.W. 5889397
0332620	01	SCREW	0000003	571150	.W. 5889397
0452655	10	JUMPER 4IN	0000003	571150	.W. 5889397
0737927	01	HOOD ACCOUSTIC	0000205	415481	.W. 5161507
0737942	01	GUIDE PAPER	0000206	415481	.W. 5161507
0842612	01	COVERPLATE	0000003	571150	.W. 5889397
1136023	01	RIBBON CTDG.	0000207	415481	.W. 5161507
2108474	01	PADDLES	0000032	571150	.W. 2190930
2108860	01	CE TOOL	0000003	571150	.W. 5889397
2162567	01	BOX OF KIMWIPES	0000033	571150	.W. 2190930
2162666	03	PAD	0000003	571150	.W. 5889397
2182907	01	CABLE ASM	0000003	571150	.W. 5889397
2190552	01	KICKSTRIP DWG	0000003	571150	.W. 5889397
2190618	01	KICKSTRIP TAPE ON	0000003	571150	.W. 5889397
2190619	01	KICKSTRIP	0000003	571150	.W. 5889397
2190620	01	KICKSTRIP TAPE ON	0000003	571150	.W. 5889397
2190979	01	KICKSTRIP	0000003	571150	.W. 5889397
2191786	01	BOLT	0000003	571150	.W. 5889397
2197864	06	JUMPER ASM	0000003	571150	.W. 5889397
2200007	01	FEELER GUAGE	0000034	571150	.W. 2190930
2200052	01	SCOPE ADAPTOR	0000035	571150	.W. 2190930
2200057	01	FEELER GUAGE	0000036	571150	.W. 2190930
2200079	06	JUMPER ASM	0000003	571150	.W. 5889397
2200200	01	ALCOHOL	0000037	571150	.W. 2190930
2207726	01	BORON NITRIDE	0000908	571084	.W. 2190930
2243123	01	SPACER	0000003	571150	.W. 5889397
2243320	01	KICKSTRIP	0000003	571150	.W. 5889397
2243650	01	FORMS RACH	0000003	571150	.W. 5889397
7374507	01	FLAMMABLE LABEL - ON CARTON	0000010	415481	.W. 2190930
A26-5914	01	R.L.	0000009	571150	.W. 5889397
X26-3566	01	REFERENCE MANUAL	0000009	571150	.W. 5889397
Y26-0910	01	PARTS CATALOG	0000031	571150	.W. 2190930
Y26-3668	01	FEMM MANUAL	0000029	571150	.W. 2190930
Y26-3669	01	FETO MANUAL	0000030	571150	.W. 2190930
Y26-3670	01	FETO	0000009	571150	.W. 5889397
Y26-5977	01	FEMM MANUAL	0000003	571150	.W. 5889397
Y26-5978	01	FETO	0000009	571150	.W. 5889397
120-1999	50	IR DECK	0000003	571150	.W. 5889397
120-2003	01	LOG BOOK	0000003	571150	.W. 5889397
124-0070	01	MANUAL	0000202	415481	.W. 5161507
127-0808	01	PARTS CATALOG	0000009	571150	.W. 5889397
225-3207	01	MANUAL	0000203	415481	.W. 5161507
225-3353	01	MANUAL	0000204	415481	.W. 5161507
229-5030	01	CONSOLE CHECK SHEET	0000003	571150	.W. 5889397
588-9409	01	INSTALLATION INST. MANUAL	0000003	571150	.W. 5889397
5229-0036	01	FOLDER BLUE	0000003	571150	.W. 5889397
5229-5032	01	CODE GUIDE	0000003	571150	.W. 5889397

TABLE OF CONTENTS VOL#A01 FOR 1131 C00 -20655 MODE P4 RQST BY 03096 6 22 VB<* DATE 07JUN73

PAGE NO. SH	TITLE	PART NO	EC NO.	FEATURE B/M OR B/MS
** LOGIC TYPE DIAG AND OLTS MANUALS 7				
03B0-	FUNCTION TEST LISTING	2243964	420403	.W. 5889397
0305*	PLO FUNCTION DESCRIP	2191238	571063	.W. 5889397
0305-	PLO FUNCTION LISTING	2191236	571063	.W. 5889397
03B0	FUNCTION TEST PIDS	2243966	420403	.W. 5889397
0398-0	MONITOR CONTROL I/O TEST	5889437	571156	.W. 5889397
0399*0	MAINT DIAG 1130 CPU INDEX	5889436	571156	.W. 5889397
**03A1*	CPU FUNCTION DESCRIP	2191206	420317	.W. 5889397
**03A1-	CPU FUNCTION TEST LISTING	2191204	420403A	.W. 5889397
**03A3*	DT LOADER DESCRIP	2191254	415490C	.W. 5889397
**03A3-	DT LOADER LISTING	2191252	415490C	.W. 5889397
**03A5*	DT CARD PROGRAM DESCRIP	2191262	571053	.W. 5889397
**03A5-	DT CARD PROGRAM	2191260	415490B	.W. 5889397
**03B1-	FUNCTION TEST LISTING	2243967	420403	.W. 5889397
03A1-0A	MAINT DIAG 1130 TABLE CNTS	5889435	571155	.W. 5889397

TABLE OF CONTENTS VOL#A02 FOR 1131 C00 -20655 MODE P4 RQST BY 03096 6 22 VB<* DATE 07JUN73

PAGE NO. SH	TITLE	PART NO	EC NO.	FEATURE B/M OR B/MS
** LOGIC TYPE DIAG AND OLTS MANUALS 7				
0304*	CONSOLE DESCRIP	2191242	420317	.W. 5889397
0304-	CONSOLE LISTING	2191240	420317	.W. 5889397
03AA	RELOADER DESCRIP	2191283	419643	.W. 5889397
*03AA-	1442 RELOADER LISTING	2191281	419643	.W. 5889397
03B4-*	DESCRIP DIAG	5889433	571156	.W. 5889397
03B4-0	METER TEST 1130 DIAGNOSTIC	5889431	571152	.W. 5889397
***03A6*	STORAGE ADJ DESCRIP	2191246	420403	.W. 5889397
***03A6-	STORAGE ADJ LISTING	2191244	420403	.W. 5889397
***03A8*	INTERR TEST DESCRIP	2191270	420317	.W. 5889397
***03A8-	INTERR TEST LISTING	2191268	420403	.W. 5889397
***030A*	DISK ADJ DESCRIP & LISTING	2243957	571005	.W. 5889397
****03A0-	SCOPE LOOP LISTING	2243962	571053	.W. 5889397
****0302*	DIMAL DESCRIP	2243961	420403A	.W. 5889397

TOTAL PAGES THIS VOLUME 13

TABLE OF CONTENTS VOL#A03 FOR 1131 C00 -20655 MODE P4 RQST BY 03096 6 22 VB<* DATE 07JUN73

PAGE NO. SH	TITLE	PART NO	EC NO.	FEATURE B/M OR B/MS
** LOGIC TYPE DIAG AND OLTS MANUALS 7				
0300*	DIAG MONITOR DESCRIPTION	2191202	571036	.W. 5889397
0300-	DIAG MONITOR LISTING	2191200	571053	.W. 5889397
0308*	2315 DISK DESCRIP	2191218	420403	.W. 5889397
0308-	2315 DISK LISTING	2191216	420403	.W. 5889397
030F	1442 FUNCTION DESCRIP	2191226	571036B	.W. 5889397
*030F-	1442 FUNCTION LIST	2191224	419643	.W. 5889397
032F	1442 TIMING TEST DESCRIP	2191230	571005	.W. 5889397
*032F-	1442 TIMING TEST LIST	2191228	419643	.W. 5889397
032C-*	1132/1130 DIAGNOSTIC	5889424	571152	.W. 5889397
032C-0	LISTING DIAG	5889422	571154	.W. 5889397
032D-*	2310/1130 DIAGNOSTIC	5889427	571152	.W. 5889397
032D-0	2310/1130 DIAGNOSTIC	5889425	571154	.W. 5889397

A1 CONNECTOR
E09 BB101AB4
E11 BB111AA4

A2 CONNECTOR
B02 XC101BN4
B03 XC101BP4
B04 XC101BQ4
B05 XC101BR4
B07 XC111BF4
B08 XC111BG4
B09 XC111BH4
B10 XC111BJ4
D02 XC121BS4
D04 XC121BT4
D05 XC121BU4
D06 XC121BV4
D07 XC131BE4
D09 XC131BF4
D10 XC131BG4
D11 XC131BH4

A3 CONNECTOR
B02 XC111BB7
B03 XC111BB5
B04 XC111BB3
B05 XC111PB1
B07 XC111AY4
B08 XC111BD4
B09 XC111AE4
B10 XC111AF4
B12 XK111AV4
D02 XC131BB7
D04 XC131BB5
D05 XC131BB3
D06 XC131BB1
D07 XC131AY4
D09 XC131BD4
D10 XC131AE4
D11 XC131AF4
D12 XK111AU4
D13 XK111AT4

A4 CONNECTOR
B02 XW211BF4
B03 XW211BM4
B04 XW221BH4
B05 XW221BL4
B07 XW211BJ4
B08 XW121AP4
B09 XW111AH4
B10 XW211BL4
B12 XW221BJ4
B13 XW121Ax4
D02 XW211BH4
D04 XW211BK4
D05 XW221BF4
D06 XW221BK4
D07 XW211BG4
D09 XW121AU4
D10 XW101AD4
D11 XW211BN4
D12 XW121AA4
D13 XW221BG4

A5 CONNECTOR
B13 KW101AF2
D02 XC121BR4
D05 XC141BN6
D06 XC141BN2
D07 DN201BF4
D09 KW101AP4
D10 XK101AS4
D11 XF131BF4
D12 KR111BG4
D13 XW121AB4

A6 CONNECTOR
B03 RB301AA4
B04 RB301AC4
B05 RB301AE4
B06 RB301AG4
B07 RB311AA4
B08 RB311AC4
B09 RB311AE4
B10 RB311AG4
B11 KU211AF4
B12 KU211AD4
B13 KU211AC4
D02 RB301AB4
D03 RB301AD4
D04 RB301AF4
D05 RB301AH4
D06 RB311AB4
D07 RB311AD4
D09 RB311AF4
D10 RB311AH4
D12 KU211AA4
D13 KU211AB4

A7 CONNECTOR
B03 XK101AV4
B09 KT321BA4
B10 KA111AN6
D03 KU311AU4
D06 XC141AF4
D07 KW101AQ4
D09 KU201BB4
D11 KR111BD4
D12 KW101BC4

B1 CONNECTOR
A09 BB111AA4
A11 BB101AA4
B09 BB111AC4
B11 BB101AC4
C09 BB121AB4
C11 BB111AB4
D09 BB131AA4
D11 BB121AA4
E09 BB131AC4
E11 BB121AC4

B2 DOUBLE CARD
B3 5804615 4615

XC101 01 02 03 04 05 06
07 08 09 10 11 12
13 14 15 16 17 18
19 20 21 22 23 24
25 26 27 28 29 30
31 32
XC111 33 34 35 36 37 38
39 40 41 42 43 44
45 46 47 48 49 50
51 52 53 54
XW121 B1
XC121 C1
XK111 D1
XC141 E1

B4 SINGLE CARD
5803819 3819

XW121 A1
XW211 A2 A3
XW221 A4 A5 A6
XW211 A7 A8

B5 SINGLE CARD
5803819 3819

XW121 A1
XW211 A2 A3
XW221 A4 A5 A6
XW211 A7 A8

B6 CONNECTOR
B02 RB301AA4
B03 RB301AC4
B04 RB301AE4
B05 RB301AG4
B07 RB311AA4
B08 RB311AC4
B09 RB311AE4
B10 RB311AG4
B12 KW101BE4
D02 RB301AB4
D04 RB301AD4
D05 RB301AF4
D06 RB301AH4
D07 RB311AB4
D09 RB311AD4
D10 RB311AF4
D11 RB311AH4
D12 XF141AZ4

C1 CONNECTOR
A11 BB131AB4
B09 BB141AA4
B11 BB131AD4
C09 BB141AC4
C11 BB141AB4
D09 XR201BA4
E09 XR281AZ4
E11 BB121AA4

C2 DOUBLE CARD
C3 5804615 4615

XC121 01 02 03 04 05 06
07 08 09 10 11 12
13 14 15 16 17 18
19 20 22 23 24 25
26 27 28 29 30 31
32
XC131 33 34 35 36 37 38
39 40 41 42 43 44
45 46 47 48 49 50
51 53 54
XW121 B1
XC121 C1
XK111 D1
XC141 E1

C4 DOUBLE CARD
C5 5806208 6208

XW211 01 02 03 04 05 06
07 08 09 10 11 12
13 14 15 16 17 18
19 20
XW221 21 22 23 24 25 26
27 28 29 30 31 32
33 34 35
XW101 36 37 38 39 40
XW221 41 42 43 44
XW211 45 46 47 48 49 50
51 52
XW221 53 54 55 56 57 58
59
XW101 B1
XW111 C1

D1 CONNECTOR
A09 XR291BB4
E09 XC141AX6
E11 DU101BD4

D2 SINGLE CARD
5800000 0000

XC141 A1
XK101 B1
XK111 C1
XK101 D1 E1 F1

D3 SINGLE CARD
5800509 0509

XK101 A1
XK111 B1 C1
XK101 D1 E1
XK111 F1 G1
DU111 H1 J1
XW111 K1

D4 SINGLE CARD
5803404 3404

XW101 A1 A2 B1 B2
XW111 C1 C2 D1 D2
XW101 E1 E2

D5 SINGLE CARD
5803819 3819

KR111 A3
KW101 A4
XF131 A5
XW121 A6
XK101 A7
XK111 A8

D6 SINGLE CARD DISK
5803016 3016

XF111 A1 A2 A3 A4 A5
XF171 A6
XF111 A7 A8 A9

E1 CONNECTOR
A11 DU111AJ4
B09 DU101BE4
B11 DU101BB4
D09 DU101AY4
D11 DU101BD4
E09 DU101BA4
E11 DU111AY4

E2 SINGLE CARD
5803794 3794

XK101 A1 A2 A3 A4 A5
XK111 B1 B2 B3 B4 B5 B6
B7 B8 B9 BA

E3 SINGLE CARD
5803816 3816

XK101 A1 A2 B1 B2

E4 SINGLE CARD
5800000 0000

XW101 A1 B1
XW111 C1
XK111 D1
XW121 E1 F1

E5 SINGLE CARD
5800000 0000

XC141 A1
XW101 B1
XW121 C1 D1 E1 F1

E6 SINGLE CARD
5800000 0000

XF141 A1
XF201 C1
XF151 D1
FA171 E1
XC141 F1

UNUSED PORTIONS

B

E7 SINGLE CARD DISK
5800000 0000

XF171 A1
XF141 B1 C1
XF201 D1
XF171 E1
XF121 F1

F1 CONNECTOR
A11 DU111AZ4
B09 DU101AA4
B11 DU111AM4
C09 DU101AB4
C11 XR281AT6
D09 DU111AC4
D11 XR281AT6
E09 DU111AB4
E11 DU111BC4

F2 SINGLE CARD
5800533 0533

DU111 A1 A2 B1 B2
DU101 C1
DU111 D1

F3 SINGLE CARD
5804008 4008

DU111 A2 A3 A4 A5 A6 A7
A8 AA AB AC AD B1
C1 D1

F4 SINGLE CARD
5803794 3794

XW111 A1 A2 A3 A4 A5 B1
B2 B3 B4 B5 B6 B7
B8 B9 BA

F5 SINGLE CARD
5803816 3816

XW101 A1 A2 B1 B2

F6 SINGLE CARD
5800453 0453

XC141 A1 E1 E2 F1 F2 G1
G2
XW111 H1 H2

UNUSED PORTIONS

B C D

F7 SINGLE CARD
5800000 0000

XW121 A1
XW101 B1
FA171 C1 D1
XW121 E1
XW101 F1

G1 CONNECTOR
A09 DU111AA4
A11 XP201BE4

G3 SINGLE CARD
5804008 4008

DU101 A1 A2 A3 A4 A5 A6
A7 A9 AA AB AC AD
B1 C1 D1

G4 SINGLE CARD
5800236 0236

DU101 A1 B1 C1
XW111 D1
XK101 E1

UNUSED PORTIONS

F

G5 SINGLE CARD
5803421 3421

DU101 A1 B1
XW121 C1
XW101 D1
XW121 E1
XW101 F1
XW121 G1 H1 J1
XW101 K1

G6 SINGLE CARD DISK
5803793 3793

XF211 01 02 03 04 05 06
07 08 09 10 11 12
13 14 15 16 17 18
19 20 21 22 23 24
25 26 27 28 29 30
31 32 33 34 35 36
37 38 39 40 41 42
43

G7 SINGLE CARD
5803356 3356

KW101 A1 A2 A3 A4 A5 A6
B1 B2

H3 SINGLE CARD
5803016 3016

DU111 A1 A2 A3 A4 A5
DU101 A6 A7 A8 A9

H4 SINGLE CARD
5803421 3421

DU101 A1
KW101 B1
FA171 C1
XF121 D1
XF141 E1
XF191 G1
XK101 J1
XW211 K1

UNUSED PORTIONS

F H

H5 SINGLE CARD
5803794 3794

XF111 A1 A2 A3 A4 A5
XC141 B1 B2 B3 B4 B5 B6
B8 B9 BA

H6 SINGLE CARD DISK
5803757 3757

XF101 A1 A3 A5 A6 A7 A8
A9 AA AC AD AE AF
B1 B2 C1 C2

H7 SINGLE CARD
5800000 0000

XF251 A1 B1
DU121 C1
XC141 E1
XW101 F1

UNUSED PORTIONS

D

H8 CONNECTOR
D04 FA171AQ4

J4 DOUBLE CARD DISK
J5 5804628 4628

XF301 01 02 03 04 05 06
07 08 09 10 11 12
13 14 15 16 17 18
19 20 21 22 23 24
XF311 25 26 27 28 29 30
31 32 33 34 35 36
37 38 39 40 41 42
43 44 45 46 47 48
XF321 49 50 51 52 53 54
55 56 57 58 59 60
61 62 63 64 65 66
67 68 69 70 71 72
XF331 73 74 75 76 77 78
79 80 81 82 83 84
85 86 87 88 89 90
91 92 93 94 95 96

J6 DOUBLE CARD DISK
J7 5806217 6217

XF121 01 02 03 04 05 06
07 08 09 10 11
XF131 12
XF121 13 14 15 16 17 19
20 21 22 23 24 25
26 27 28 29 30 31
32 33
XF131 34 35 36 37 38 39
40 41 42 43 44 45
46 47 48 49 50
XF121 51
XF131 53 54 55 56

J8 CONNECTOR
E04 FA171AJ4
C06 FA171AD4

K3 SINGLE CARD
5803421 3421

DU121 A1
FA191 B1 C1 D1
FA171 E1
FA191 F1
DU121 G1

UNUSED PORTIONS

H J K

K4 SINGLE CARD DISK
5803028 3028

XF271 A1 A2 A3 A4 A5 A6
A7 A9

K5 SINGLE CARD DISK
5803028 3028

XF261 A1 A2 A3 A4 A5
XF271 A6 A7
XF261 A8

K6 DOUBLE CARD DISK
K7 5806218 6218

XF151 01 02 03 04 07 08
09 10 11 12 13 14
15 16 17 18 19 20
21
XF141 24 25 26 27 28 29
30 31 32 33 34 35
36 37 38 39 40 41
42 43 44 45
XF151 46 47 48 49 49

L2 SINGLE CARD DISK
5807509 7509

XF201 A1 A2 A3 A4 A5 A6
A7 A8
XF171 B1 B2

UNUSED PORTIONS

C D

L3 SINGLE CARD
5800238 0238

DU121 A1
FA191 B1 C1 D1
XF131 E1

L4 SINGLE CARD DISK
5800000 0000

XF111 A1 B1
XF171 C1
XF161 D1
XF251 E1
XF101 F1

L5 SINGLE CARD DISK
5803028 3028

XF261 A1 A2 A3 A4 A5 A6
A7 A8

L6 DOUBLE CARD DISK
L7 5806219 6219

XF161 01 02 03 04 05 06
07 08 09 10 11 12
13 14 15 16
XF241 17 18 19 20 21 22
23 24 25 26 27 28
29 30 31 32 33 34
35 36 37 38 39 40
41
XF191 42 43
XF251 44 45
XF191 46 47
XF251 48 49
XF191 50
XF251 51
XF191 52 53
XF251 54 55 56
XF191 57 58
XF251 59 60
XF191 61
XF251 62

M4 DOUBLE CARD PL
M5 5806223 6223

XG101 01 02 03 04 05 06
07 08 09 10 11 12
13 14 15 16 17 18
19 20 21 22 23 24
25 26 27 28
XG111 29 30 31 32 33 34
35 36 37 38 39 40
41 42 43 44 45 46
47 48 49 50 51 52
53 54 55 56

M6 DOUBLE CARD DISK
M7 5806220 6220

XF171 01 02 03 04 05 06
07 08 09 10 11
XF201 13 14 15 16 17 18
19 20 21 22 23 24
25 26 27 28 29
XF171 30 31 32 33 60 61
XF181 B1 B2 B3 B4 B5 B6
B7 B8 B9 BA BB BC
BD BE BF BG BH BJ
BK BL BM BN BP BQ
BR BS BT

N2 CONNECTOR
B02 PB101AA4
B03 BB101AC4
B04 BB111AB4
B05 BB121AA4
B07 BB121AC4
B08 BB131AB4
B09 BB131AD4
B10 BB141AB4
B12 XF251AQ4
B13 KM321BG4
D02 BB101AB4
D04 BB111AA4
D05 BB111AC4
D06 BB121AB4
D07 BB131AA4
D09 BB131AC4
D10 BB141AA4
D11 BB141AC4
D12 XF141AW4
D13 XF141BC4

N3 CONNECTOR
B02 RA101AX6
B03 RA121AX6
B04 RA141AX6
B05 RA161AX6
B07 RA201AX6
B10 RA261AX6
B12 XF161AS4
D02 RA111AX6
D03 RA101AX6
D04 RA131AX6
D05 RA151AX6

SOCKET LISTING
DATE 03-09-71 MACH. 1131-C

LOG 1202 BOARD 01A-C1
PREV. ENGR. - -
PRES. ENGR. 03-09-71 571150
P.N. 5889391

IBM CORP. GSD BLK.

A C 0 0 3 000

N3	D06	RA171AX6
	D07	RA211AX6
	D10	RA251AX6
	D11	RA271AX6
	D12	XC141AA4
	D13	KM211AT4
N4	CONNECTOR	
	B04	DN201BE4
	B05	DU101BF4
	B07	XF161AQ6
	B08	XC141AF4
	B09	XC141BH4
	B10	KA111AN6
	B12	KU211AD4
	B13	KU211AC4
	D02	DN201BA6
	D04	FA171AF4
	D05	KT321BA4
	D06	XC141AX2
	D09	XR291BB4
	D10	KU211AE4
	D11	DU121AN4
	D12	KU211AA4
	D13	KU211AB4
N5	CONNECTOR	
	B02	XG101AW4
	B03	XG101BA4
	B04	XG111AT4
	B10	XG111BD4
	D02	XG101AX4
	D04	XG101BB4
	D05	XG111AW4
N6	CONNECTOR	
	B02	KM211AN4
	B03	XC141AX6
	B04	KT321BC2
	B05	DN201BF4
	B07	KM101AQ2
	B09	KM321BD4
	B10	KM301BG4
	B13	KM311BD4
	D02	KR111AY6
	D04	KU311AU4
	D06	KW101BC4
	D09	KU201BB4
	D10	KT321AT4
	D11	KR111BD4
	D13	KM311BG4
N7	CONNECTOR	
	B02	WF391AE2
	B03	WF391AB2
	B04	XF191AS4
	B05	WF391AA6
	B07	WF391AC2
	B08	WF391AE6
	B09	XF141BF4
	B10	XF201AG2
	B12	WF391AD2
	B13	XF161AR4
	D02	WF391AB6
	D04	XF171BB4
	D05	WF391AA2
	D06	WF391AC6
	D07	XF191AQ4
	D09	XF191AL2
	D10	XF201BH4
	D11	XF201BH4
	D12	WF391AE4
	D13	WF391AD6

PLUG LIST

PART NO	ACC	TYPE	SOCKETS				TOTAL
5800000		0000	D2	E4	E5	E6	06
			F7	H7			
5800000	DISK	0000	E7	L4			02
5800236		0236	G4				01
5800238		023B	L3				01
5800453		0453	F6				01
5800509		0509	D3				01
5800533		0533	F2				01
5803016		3016	H3				01
5803016	DISK	3016	D6				01
5803028	DISK	302B	K4	K5	L5		03
5803356		3356	G7				01
5803404		3404	D4				01
5803421		3421	G5	H4	K3		03
5803757	DISK	3757	H6				01
5803793	DISK	3793	G6				01
5803794		3794	E2	F4	H5		03
5803816		3B16	E3	F5			02
5803819		3819	B4	B5	D5		03
5804008		4008	F3	G3			02
5804615		4615	B2	C2			02
5804628	DISK	4628	J4				01
5806208		6208	C4				01
5806217	DISK	6217	J6				01
5806218	DISK	621B	K6				01
5806219	DISK	6219	L6				01
5806220	DISK	6220	M6				01
5806223	PL	6223	M4				01
5807509	DISK	7509	L2				01
		CONN	A1	A2	A3	A4	22
			A5	A6	A7	B1	
			B6	C1	D1	E1	
			F1	G1	H8	J8	
			N2	N3	N4	N5	
			N6	N7			

SOCKET LISTING
DATE 03-09-71 MACH. 1131-C

LOG 1202 BOARD 01A-C1
PREV. ENGR. _ _
PRES. ENGR. 03-09-71 571150
P.N. 5889391

IBM CORP. GSD BLK.

A C O 3

A C O 3 000

```
A2              CONNECTOR
                B02    RN101BH2
                B03    RN101AY2
                B04    RN101AL2
                B05    RN101BJ2
                B07    RN101BA2
                B08    RS101AL2
                B09    RS101AM2
                B10    RS111AQ2
                B12    KU201AL4
                B13    KU201AM4
                D02    RN101AN2
                D04    RN101BB2
                D05    RN101AQ2
                D06    RN111AR2
                D07    RN111AS2
                D09    RS111AR2
                D10    RS121AN2
                D11    RS121AP2
                D12    KU211AJ4
                D13    KU201AN4
----------------------------------------
A3              CONNECTOR
                B02    KD101AS2
                B03    KD101AT2
                B04    KD111AY2
                B05    KD101AU2
                B07    KR111AW2
                B08    KC101AE2
                B09    KC101AQ2
                B10    KC111AE2
                B12    KC111AQ2
                D02    KD111BA2
                D04    KD111BG4
                D05    KD111BB2
                D07    KR111AX2
                D09    KC101AK2
                D10    KC101AV2
                D11    KC111AK2
                D12    KC111AV2
----------------------------------------
A4              CONNECTOR
                B02    KT111AW2
                B03    KT121AZ2
                B04    KT121AY2
                B05    KS101BD2
                B08    KM301AX2
                B09    KM311AX2
                B10    KM321AX2
                D02    KT111AX2
                D04    KS101BB2
                D05    KT131AR2
                D06    KS111AY2
                D07    KM111AV2
                D09    KM301AZ2
                D10    KM311AZ2
                D11    KM321AZ2
----------------------------------------
A5              CONNECTOR
                B02    KT321BD6
                B03    KT321BD2
                B04    KT321BB2
                B05    KT321BB6
                B12    KT321BE4
                B13    KT331AA6
                D02    KG211BL4
                D04    KR111BH4
                D05    KT331AA2
                D06    KT321BC2
                D07    KT321BC6
                D09    KL201AV4
                D10    KA111BK4
                D11    KT321BF6
                D12    KT321BF2
                D13    KA111BJ4
----------------------------------------
A6              CONNECTOR
                B02    KC101AQ6
                B04    LN201BE4
                B05    DU101BF4
                B07    XF161AQ6
                B08    XC141AF4
                B09    XC141BH4
                B10    KA111AN6
                B12    KU211AD4
                B13    KU211AC4
                D02    DN201BA6
                D04    FA171AF4
                D05    KT321BA4
                D06    XC141AX2
                D09    XR291BB4
                D10    KU211AE4
                D11    DU121AN4
A               D12    KL211AA4
C               D13    KU211AB4
O---------------------------------------
0A7             CONNECTOR
4               B02    KM211AN4
                B03    XC141AX6
                B04    KT321BC2

A7              B05    DN201BF4
                B07    KM101AQ2
                B09    KM321BD4
                B10    KM301BG4
                B13    KM311BD4
                D02    KR111AY6
                D04    KU311AL4
                D06    KW101BC4
                D09    KU201BB4
                D10    KT321AT4
                D11    KR111BD4
                D13    KM311BG4
****************************************
B2              DOUBLE CARD
B3              5804664 4664

        RN101  01 02 03 04 05 06
               07 08 09 10 11 12
               13 14 15 16 17 18
               19 20 21 22 23
        RN111  24 25 26
        RN101  27 28 29 30 31 32
        RN111  33 34 35 36
        RN101  37 38 39
        RN111  40 41 42 43 44 45
        RN101  46
        RN111  47 48
        RN101  49
        RN111  50 51 52
----------------------------------------
B4              DOUBLE CARD
B5              5806212 6212

        KT321  A1 A2 B1 B2 D1 D2
               E1 E2 F1 F2 G1 G2
               H1 J1 J2 K1 K2 L1
               L2
        KT331  M1 N1
        KU201  P1
        KT331  Q1 Q2 Q3 Q4 Q5 Q6
               Q7 Q8 S1 S2 T1 T2
               T3 T4

               UNUSED PORTIONS

               C
----------------------------------------
B6              SINGLE CARD
                5803024 3024

        KU211  A1 A2 A3 A4 B1 B2
        KT201  B3
----------------------------------------
B7              SINGLE CARD
                5800247 0247

        KM212  B1

               UNUSED PORTIONS

               A C
****************************************
C2              DOUBLE CARD
C3              5804676 4676

        DN101  A1 A3 A4 A5 A6 A7
               A8 AB AC AD AE AF
               AG AH AJ AK AM AN
               AP AQ AS AT AV AW
               AX
----------------------------------------
C4              DOUBLE CARD
C5              5806213 6213

        KA111  01 03 04 05 08 09
               10 11 12 13 14 15
               16 17 18 19 20 21
               22 23 24 25 26 27
               28 29 30
        KA101  35 36 37 38 39 40
               41 43 44 45 47 49
               50 51 52 53 54 55
               56 58 59 60 61
----------------------------------------
C6              SINGLE CARD
                5800000 0000

        XC141  A1 B1
        KM201  C1
        KL201  D1
        KB101  E1
        KL201  F1
****************************************
D1              CONNECTOR
                E09    RE221BF4
                E11    MC101AY4
----------------------------------------
D2              DOUBLE CARD
D3              5804675 4675

        DN111  A1 A2 A3 A4 A5 A6
               A7 A8 A9 AA AB AC
               AD AE AF AG AH AJ
               AK AL AM AN AP AQ
               AS AT AU AV AW AX
               AY AZ
----------------------------------------
D4              SINGLE CARD
                5803481 3481

        KC101  01 02 03 04 05 06
               07 08 09 10 11 12
               13 14 15 16 17
        KC111  18 19 20 21
        KC101  22 23
        KC111  24 25 26 27
        KC101  28
        KC111  29 30 31 32 33 34
        KC101  35 36
        KC111  37 38 39 40
        KC101  41 42
        KC111  43 44
        KC101  45
----------------------------------------
D5              SINGLE CARD          C5
                5803481 3481

        KM101  01 02 03 04 05 06
               07 08 09 10 11 12
               13 14 15 16 17
        KM111  18 19 20 21
        KM101  22 23
        KM111  24 25 26 27
        KM101  28
        KM111  29 30 31 32 33 34
        KM101  35 36
        KM111  37 38 39 40
        KM101  41 42
        KM111  43 44
        KM101  45
----------------------------------------
D6              SINGLE CARD
                5800000 0000

        KU201  A1
        KA111  B1
        KU201  C1
        KU211  D1
        KM201  E1
        XU201  F1
----------------------------------------
D7              SINGLE CARD
                5803794 3794

        KM212  A1 A2 A3 A4 A5 B1
               B2 B3 B4 B5 B6 B7
               B8 B9 BA
----------------------------------------
D8              CONNECTOR
                E04    KM201AD4
****************************************
E1              CONNECTOR
                A11    RB201BF4
                B09    RB241BF4
                B11    RB211BF4
                C09    RB251BF4
                C11    FD171AS4
                D09    RB261BF4
                D11    MC101AY4
                E09    RB271BF4
                E11    MC101AQ4
----------------------------------------
E2              DOUBLE CARD
E3              5804625 4625

        KG221  A1 A2 A3 A4 A5 A6
               B1 B2 B3 B4 B5 B6
               B7 B8 B9 BA BB BC
               BD BE
----------------------------------------
E4              SINGLE CARD
                5800002 0002

        KU201  A1 B1 C1 D1 E1
----------------------------------------
E5              SINGLE CARD
                5803765 3765

        KA101  A1
----------------------------------------
E6              SINGLE CARD
                5803421 3421

        KL201  A1 B1 C1 D1 E1
        KL211  F1
        KL101  G1
        KL211  H1 J1
        DN201  K1
----------------------------------------
E8              CONNECTOR
                C06    KM211AS4
                E06    KM212BC4
****************************************
F1              CONNECTOR
                A11    KU101AF4
                B11    MC101AW4
                C09    KR111BE4
                C11    WZ061AH4
                D09    KR111BF4
                E09    KU301AT2
                E11    KU301AT6
----------------------------------------
F2              DOUBLE CARD
F3              5806257 6257

        RS121  01 02
        RS111  04 05
        RS121  06 07 08 09 10 11
        RS111  12 13
        RS121  14 15 16 17
        RS111  18
        RS121  19 20
        RS111  21
        RS121  22 23 24 25
        RS111  26 27
        RS101  28 29 30 31 32 33
        RS111  34 35 36
        RS101  37 38 39 40
        RS111  41 42
        RS101  43 44
        RS111  45
        RS101  46 47 48 49
        RS111  50
        RS101  51 52
        RS111  53 54 55
        RS121  56 59
----------------------------------------
F4              DOUBLE CARD
F5              5806251 6251

        KT201  01 02 03 05 06 07
               09 10 11 12 13 14
               15 16 17 18 19 20
               21 22 23 24 25 27
               28 29
----------------------------------------
F6              SINGLE CARD
                5803761 3761

        KM321  01 02 03 04 05 06
               07 08 09 10 11 12
               13 14 15 16 17 18
               19 20 21 22 23 24
               25 26 27 28 29 30
               32 B1
----------------------------------------
F7              SINGLE CARD          CSA
                5803815 3815

        KM211  AA AB AC AD AE AF
               AG AH AJ AK AL AM
               AN AP AQ AS AT AU
               AV AW B1
----------------------------------------
F8              CONNECTOR
                A06    KA101BE6
                B06    KL201AE4
                C04    KG231BD4
                C06    KU211AL4
                D04    KC101AQ6
****************************************
G1              CONNECTOR
                A09    MB111AN4
                A11    MB111AM4
----------------------------------------
G2              DOUBLE CARD
G3              5804672 4672

        KD101  01 02
        KD111  03 04
        KD101  05 06 07 08 09 10
               11 12 13 14 15 16
               17 18 19 20 21 22
               23 24 25 26 27 28
        KD111  29 30 31 32 33 34
               35 36 37 38 39 40
               41 42 43 44 45 46
               47 48 49 50 52 54
               55 56
----------------------------------------
G4              DOUBLE CARD
G5              5804616 4616

        KT101  02 03 04 05 06
        KT111  07 08 09 10
        KT101  11 12
        KT111  13 14 15 16 17 18
               19 20 21 22 23 24
        KT101  25 26 27 28
        KT111  29
        KT101  30 31 32
        KT111  33 34 35 36
        KT101  37 38 39 40
        KT111  41
        KT101  42 43 44
        KT111  45 46 47 48 49 50
               51
----------------------------------------
G6              SINGLE CARD
                5803761 3761

        KM311  01 02 03 04 05 06
               07 08 09 10 11 12
               13 14 13 16 17 18
               19 20 21 22 23 24
               25 26 27 28 29 30
               32
----------------------------------------
G7              SINGLE CARD
                5803761 3761

        KM301  01 02 03 04 05 06
               07 08 09 10 11 12
               13 14 15 16 17 18
               19 20 21 22 23 24
               25 26 27 28 29 30
               32
****************************************
H2              DOUBLE CARD
H3              5806207 6207

        KU301  01 02 03 04 05 06
               07 08 09 10 11 12
               13 15 16 17 18 19
               20 21
        KU311  22 23 24 25 26 28
               29 30 31 32 33 35
               36 37 38 39 40
        KU301  42 43
        KG151  A1 A2
----------------------------------------
H4              DOUBLE CARD
H5              5804607 4607

        KT121  01 02 03 04 05 06
               07 08 09 10 11 12
               13 14 15 16 17 18
               19 20 21 22 23
        KT131  24
        KT121  25 26
        KT131  27 28 29
        KT101  30
        KT121  31
        KT131  32 33 34 35 36 37
               39
        KT121  40
----------------------------------------
H6              SINGLE CARD
                5800000 0000

        KM201  A1 B1
        FA171  C1
        KU201  D1
        KM201  E1 F1
----------------------------------------
H7              SINGLE CARD
                5800000 0000

        KM201  A1
        DN201  B1 C1 D1 E1 F1
----------------------------------------
H8              CONNECTOR
                D04    FA171AQ4
****************************************
J2              SINGLE CARD
                5807347 7347

        MC101  A1 A2 A3 A4
        KL311  A5
        MC101  A6 A7 A8
        KU311  A9 AA
        MC101  AB AC B1 B2 B3 B4
               B5 B6 B8 B9 BA BB
               C1
----------------------------------------
J3              SINGLE CARD
                5803817 3817

        KR111  A1 A2 A3 A4 A5 A6
               A7 A8 A9 AA AB AC
               AD AE AF AG AH AJ
               AK AL AM AN AP AQ
               AS AT AU AV AW AX
----------------------------------------
J4              DOUBLE CARD
J5              5804680 4680

        KS101  01 02 03 04 05 06
               07
        KS111  08
        KS101  09 10 11 12
        KS111  13 14
        KS101  15 16
        KS111  17
        KS101  18 19 20 21 22 23
               24 25 26 27 28 29
               30 31 32 33 34
        KS111  35 36 37 38 39 40
               41 42 43 44 45 46
               47 48 49 50 51 52
               53 54 55
----------------------------------------
J6              SINGLE CARD
                5800069 0069

        DN201  A1 B1 C1
        KM212  D1
----------------------------------------
J7              SINGLE CARD
                5800509 0509

        DN201  A1 B1 C1
        KM201  D1 E1 F1 G1 H1 J1
               K1
----------------------------------------
J8              CONNECTOR
                B04    FA171AJ4
                C06    FA171AD4
****************************************
K2              DOUBLE CARD
K3              5807312 7312

        KB101  01 02 03 04 05 06
               07 09 10 11 13 15
               17 18 19 20 21 22
               23 24 25 26 27
        KB111  28 29 30 31 32 33
               34 35 36 37 38 39
               40 41 42 43 44 45
               46 47 48 49
        KT311  B1 C1
        KM201  D1
----------------------------------------
K4              DOUBLE CARD
K5              5804685 4685

        KT301  A1 B1 B2 B3 B4 B5
               B6 B7 B8 B9 BA BB
               BC BD BE BF BG BH
               BJ BK BL BM BN BP
               BQ BS BT
----------------------------------------
K6              SINGLE CARD
                5800238 0238

        DN201  A1 B1
        KM201  C1 D1 E1
----------------------------------------
K7              SINGLE CARD
                5803794 3794

        DN201  A1 A2 A3 A4 A5 B1
               B2 B3 B4 B5
        KT311  B6 B7 B8 B9 BA
----------------------------------------
K8              CONNECTOR
                E04    KD101AL4
                E06    WZ061AJ4
****************************************
L2              DOUBLE CARD
L3              5804624 4624

        KG251  01 02 03 04 05 06
               07 08 09 10 11 12
               13 14 15
        KG241  16 17 18 19 20 21
               22 23 24 25 26 27
               28 29 30 31 32
        KG251  33 34 35 36 37 38
               39 40 41
----------------------------------------
L4              DOUBLE CARD
L5              5804614 4614

        KT311  01 02 03 04 05 06
               07 08 09 10 11 12
               13 14 15 16 17 18
               19 20 24 25 26 27
----------------------------------------
L8              CONNECTOR
                A04    WZ061AJ4
                A06    KM211AU4
                B04    KD101AT2
                B06    XC141BJ4
                C04    KM321BG4
                C06    DN201AL4
                D04    KM211BC4
                E04    KM211AV4
L3              E06    DN201AZ4
****************************************
M2              DOUBLE CARD
M3              5804610 4610

        KG211  A1 A2 A3 A4 A5 A6
               A7 A8 A9 AA AB AC
               AD AE AF AG AH AJ
               AK AL AM AN AQ AS
               AT AU AV AW AX AY
               AZ
----------------------------------------
M4              DOUBLE CARD
M5              5804621 4621

        KG231  A1 A2 A3 A4 A5 A6
               A7 A9 AA AB AD AE
               AF AG AH AJ AK AL
               AM AN AP AQ AS AT
----------------------------------------
M7              SINGLE CARD
                5800000 0000

        KM212  A1 B1 C1 D1 E1 F1
----------------------------------------
M8              CONNECTOR
                A06    KM201AN4
                B06    RN111AT6
                C04    RB231BF4
                C06    KM201AL4
                D04    KL211AF4
                E04    KM211AT4
                E06    KM201AS4
****************************************
N2              CONNECTOR
                B03    KG211AX4
                B04    KG231BA4
                B05    KG241AM4
                B06    KG241AL4
                B07    KB101BB4
                B08    KB101BA4
                B09    RB101BF4
                B10    RB111BF4
                B11    RB121BF4
                B12    RB131BF4
                B13    RB141BF4
                D02    KG211AK4
                D03    KG211AY4
                D04    KG231BA6
                D05    KG241AQ4
                D06    KG211AT4
                D07    KG211BD4
                D09    RB151BF4
                D10    RB161BF4
                D11    RB171BF4
                D12    KL311AQ4
                D13    KU311AU4
----------------------------------------
N3              CONNECTOR
                B03    KT331AD2
                B04    DN111AW4
                B05    KG231AK4
                B06    KT311AF4
                B07    KT311AE4
                B08    KT311AP4
                B09    RN111AR6
                B10    KD101AZ4
                B11    KL111AA4
                B12    KU111AC4
                B13    KU111AE4
                D02    KG211BF4
                D03    KA101BG2
                D04    KG151AS2
                D05    KG231AL4
                D06    KT301AC4
                D07    KT311AD4
                D09    KG211AS4
                D10    KT301BE4
                D11    KU111AB4
                D12    KU111AD4
                D13    KU111AF4
----------------------------------------
N4              CONNECTOR
                B03    RB101BG4
                B04    KU101AE4
                B05    KR101AQ4
```

SOCKET LISTING	
DATE 12-01-71 MACH. 1131-C	A
LOG 5960 BOARD 01B-A1	C
PREV. ENGR. - -	O
PRES. ENGR. - - 571154	O
P.N. 5889392	4
IBM CORP. GSD ELK.	000

```
N4          B06   KR101AR4
            B07   KA111AN2
            B08   KU311AT4
            B09   KG121AL2
            B10   DN111AY4
            B11   KT201AX4
            B12   KT301AR4
            B13   KT201AZ4
            D02   KU311AR4
            D03   RB201BG4
            D04   KU101AB4
            D05   KR101AS4
            D06   KR101AT4
            D07   KG231AM4
            D09   KT101AT4
            D10   DN111AZ4
            D11   KT201AY4
            D12   KT301AN4
            D13   KT201AS4
-----------------------------------
N5          CONNECTOR
            B03   RD151AP2
            B04   RD161AP2
            B05   RD171AP2
            B06   RA101AU2
            B07   KG231AZ4
            B08   RQ101AY2
            B09   RQ171AY2
            B10   RA101AX6
            B11   RB161BH2
            B12   KR111AW2
            B13   RA151AX6
            D02   KG231AY4
            D03   RD151AQ2
            D04   RD161AQ2
            D05   RD171AQ2
            D06   KT201BF4
            D07   RA111AU6
            D09   RQ171AX2
            D10   RA271AX6
            D11   RB171BH2
            D12   KR111AX2
            D13   RA171AX6
-----------------------------------
N7          SINGLE CARD
            5800000 0000

      KU201 A1
      MC101 B1
      KG211 C1
      FA171 D1

            UNUSED PORTIONS

            E F
-----------------------------------
N8          CONNECTOR
            A04   KM101AV2
            A06   KM201AC4
*****************************************
```

PLUG LIST

PART NO	ACC	TYPE	SOCKETS	TOTAL
5800000		0000	C6 D6 H6 H7 M7 N7	C6
5800002		0002	E4	01
5800069		0069	J6	01
5800238		0238	K6	01
5800247		0247	B7	01
5800509		0509	J7	01
5803024		3024	B6	01
5803421		3421	E6	01
5803481		3481	D4	01
5803481	CS	3481	D5	01
5803761		3761	F6 G6 G7	03
5803765		3765	E5	01
5803794		3794	D7 K7	02
5803815	CSA	3815	F7	01
5803817		3817	J3	01
5804607		4607	H4	01
5804610		4610	M2	01
5804614		4614	L4	01
5804616		4616	G4	01
5804621		4621	M4	01
5804624		4624	L2	01
5804625		4625	E2	01
5804664		4664	B2	01
5804672		4672	G2	01
5804675		4675	D2	01
5804676		4676	C2	01
5804680		4680	J4	01
5804685		4685	K4	01
5806207		6207	H2	01
5806212		6212	B4	01
5806213		6213	C4	01
5806251		6251	F4	01
5806257		6257	F2	01
5807312		7312	K2	01
5807347		7347	J2	01
		CONN	A2 A3 A4 A5 A6 A7 D1 D8 E1 E8 F1 F8 G1 H8 J8 K8 L8 M8 N2 N3 N4 N5 N8	23

SOCKET LISTING
DATE 12-01-71 APCH. 1131-C

LOG 5960 BOARD 01B-01
PREV. ENGR. - -
PRES. ENGR. - - 571154
P.N. 5889392

IBM CORP. GSD BLK.

A C 0 0 4

	A	B	C	D	E	F	G	H	J	K	L	M	N	P	Q	R	S	T	U	V	W	X	Y	Z
1				CONN X	CONN X	CONN X	CONN X																	
2	CONN X	5804664 4664 X	5804676 4676 X	5804675 4675 X	5804625 4625 X	5806257 6257 X	5804672 4672 X	5806207 6207 X	5807347 7347 X	5807312 7312 X	5804624 4624 X	5804610 4610 X	CONN X											
3	CONN X								5803817 3817 X				CONN X											
4	CONN X	5806212 6212 X S	5806213 6213 X	5803481 3481 X	5800002 0002 X	5806251 6251 X	5804616 4616 X	5804607 4607 X	5804680 4680 X	5804685 4685 X	5804614 4614 X	5804621 4621 X	CONN X											
5	CONN X			5803481 3481 X CS	5803765 3765 X								CONN X											
6	CONN X	5803024 3024 X	5800000 0000 X	5800000 0000 X	5803421 3421 X	5803761 3761 X	5803761 3761 X	5800000 0000 X	5800069 0069 X	5800238 0238 X														
7	CONN X	5800247 0247 X S		5803794 3794 X		5803815 3815 X CSA	5803761 3761 X	5800000 0000 X	5800509 0509 X	5803794 3794 X		5800000 0000 X	5800000 0000 X S											
8				CONN X	CONN X	CONN X		CONN X	CONN X	CONN X	CONN X	CONN X	CONN X											

SYMBOLS

X- NO RULE-SOCKET
E- CONFLICT
S- PORTIONS LEFT

SLDA CHART
DATE 12-01-71 MACH. 1131-C

LOG 5960 BOARD 01B-A1
PREV. ENGR. - -
PRES. ENGR. - - 571154
P.N. 5889392

IBM CORP. GSD BLK.

AC004

AC004 000

A1 CONNECTOR
E09 RB101BH6
E11 WZ051AD4

A2 CONNECTOR
B03 KG211AX4
B04 KG231BA4
B05 KG241AM4
B06 KG241AL4
B07 KB101BB4
B08 KB101BA4
B09 RB101BF4
B10 RB111BF4
B11 RB121BF4
B12 RB131BF4
B13 RB141BF4
D02 KG211AK4
D03 KG211AY4
D04 KG231BA6
D05 KG241AQ4
D06 KG211AT4
D07 KG211BD4
D09 RB151BF4
D10 RB161BF4
D11 RB171BF4
D12 KU311AQ4
D13 KU311AU4

A3 CONNECTOR
B03 KT331AD2
B04 DN111AW4
B05 KG231AK4
B06 KT311AF4
B07 KT311AE4
B08 KT311AP4
B09 RN111AR6
B10 KD101AZ4
B11 KU111AA4
B12 KU111AC4
B13 KU111AE4
D02 KG211BF4
D03 KA101BG2
D04 KG151AS2
D05 KG231AL4
D06 KT301AC4
D07 KT311AD4
D09 KG211AS4
D10 KT301BE4
D11 KU111AB4
D12 KU111AD4
D13 KU111AF4

A4 CONNECTOR
B03 RB101BG4
B04 KU101AE4
B05 KR101AQ4
B06 KR101AR4
B07 KA111AN2
B08 KU311AT4
B09 KG121AL2
B10 DN111AY4
B11 KT201AX4
B12 KT301AR4
B13 KT201AZ4
D02 KU311AR4
D03 RB201BG4
D04 KU101AB4
D05 KR101AS4
D06 KR101AT4
D07 KG231AM4
D09 KT101AT4
D10 DN111AZ4
D11 KT201AY4
D12 KT301AN4
D13 KT201AS4

A5 CONNECTOR
B03 RD151AP2
B04 RD161AP2
B05 RD171AP2
B06 RA101AU2
B07 KG231AZ4
B08 RQ101AY2
B09 RQ171AY2
B10 RA101AX6
B11 RB161BH2
B12 KR111AW2
B13 RA151AX6
D02 KG231AY4
D03 RD151AQ2
D04 RD161AQ2
D05 RD171AQ2
D06 KT201BF4
D07 RA111AU6
D09 RQ171AX2
D10 RA271AX6
D11 RB171BH2
D12 KR111AX2
D13 RA171AX6

A8 CONNECTOR
E04 RA111AX6
E06 RA101AX6

B1 CONNECTOR
A09 RB101BH6
A11 WZ051AA4
B09 RB111BH6
B11 WZ051AB4
C09 RB121BH6
C11 WZ051AC4
D09 RB131BH6
D11 WZ051AD4
E09 RB141BH6
E11 WZ051AE4

B2 DOUBLE CARD
B3 5804619 4619

RB101 01 02 03 04 05 06 07 08 09 10 12 13 14
RB111 15
RB101 16
RB111 17 18 19 20 21 22 23 24 25 27 28 29
RB101 30
RB111 31 32 33
RB101 34 35 36 37 38 39 40 41 42 43
RB111 44 45 46 47 48 49 50 51
RB101 52
RB111 53 54
RB101 55 56 57 58
RB111 59 60 61 62
RB101 63 64
RB111 65 66
RB101 67
RB111 68
RB101 69
RB111 70

B4 DOUBLE CARD
B5 5806255 6255

RD101 01 02 03 04 05 06 07 08 09 10 11 12 13 14
RA101 15 16 17 18 19 20 21 22 23 24 25 26 27 28 29 30 31 32 33 34 35 36
RA111 37 38 39 40 41 42 43 44 45 46 47 48 49 50 51 52 53 54 55 56 57 58
RQ101 59 60 61 62 64 65 66 67 68 69 70 71 72 73 74 75 80 81 82 83 84 85
RD101 86
RA111 87 88
RA101 89 90
RA111 91

B8 CONNECTOR
A04 RA101AX6
A06 RA121AX6
B04 RA131AX6
B06 RA141AX6
C04 RA151AX6
C06 RA161AX6
D04 RA171AX6
E04 RA211AX6
E06 RA201AX6

C1 CONNECTOR
A11 WZ051AH4
B09 RB151BH6
B11 WZ051AF4
C09 RB161BH6
C11 WZ051AG4
D09 RB171BH6
D11 WZ051AH4
E09 RB201BH6
E11 WZ051AJ4

C2 DOUBLE CARD
C3 5804619 4619

RB121 01 02 03 04 05 06 07 08 09 10 12 13 14
RB131 15
RB121 16
RB131 17 18 19 20 21 22 23 24 25 27 28 29 30
RB121 31 32 33
RB121 34 35 36 37 38 39 40 41 42 43
RB131 44 45 46 47 48 49 50 51
RB121 52
RB131 53 54
RB121 55 56 57 58
RB131 59 60 61 62
RB121 63 64
RB131 65 66
RB121 67
RB131 68
RB121 69
RB131 70

C4 DOUBLE CARD
C5 5806255 6255

RD111 01 02 03 04 05 06 07 08 09 10 11 12 13 14
RA121 15 16 17 18 19 20 21 22 23 24 25 26 27 28 29 30 31 32 33 34 35 36
RA131 37 38 39 40 41 42 43 44 45 46 47 48 49 50 51 52 53 54 55 56 57 58
RQ111 59 60 61 62 64 65 66 67 68 69 70 71 72 73 74 75 80 81 82 83 84 85
RD111 86
RA131 87 88
RA121 89 90
RA131 91

C6 SINGLE CARD
5803686 3686

XF171 A1 B1
KG231 C1
KG121 D1
XF171 E1 F1
XF161 G1
XF251 H1
XF141 K1

UNUSED PORTIONS

J

C7 SINGLE CARD
5800236 0236

KM201 A1 B1 C1
MB201 D1
KM201 E1
DN201 F1

C8 CONNECTOR
C04 RA251AX6
C06 RA261AX6
D04 RA271AX6
E04 XC141AA4
E06 XF161AS4

D1 CONNECTOR
A09 RB211BH6
A11 WZ061AA4
E09 RB221BF4
E11 MC101AY4

D2 DOUBLE CARD
D3 5804619 4619

RB141 01 02 03 04 05 06 07 08 09 10 12 13 14
RB151 15
RB141 16
RB151 17 18 19 20 21 22 23 24 25 27 28 29 30
RB141 31 32 33
RB141 34 35 36 37 38 39 40 41 42 43
RB151 44 45 46 47 48 49 50 51
RB141 52
RB151 53 54
RB141 55 56 57 58
RB151 59 60 61 62
RB141 63 64
RB151 65 66
RB141 67
RB151 68
RB141 69
RB151 70

D4 DOUBLE CARD
D5 5806255 6255

RD121 01 02 03 04 05 06 07 08 09 10 11 12 13 14
RA141 15 16 17 18 19 20 21 22 23 24 25 26 27 28 29 30 31 32 33 34 35 36
RA151 37 38 39 40 41 42 43 44 45 46 47 48 49 50 51 52 53 54 55 56 57 58
RQ121 59 60 61 62 64 65 66 67 68 69 70 71 72 73 74 75 80 81 82 83 84 85
RD121 86
RA151 87 88
RA141 89 90
RA151 91

D7 SINGLE CARD
5800238 0238

KM201 A1 B1 C1 D1
MB201 E1

D8 CONNECTOR
A04 KM211AT4
E04 KM201AD4

E1 CONNECTOR
A11 RB201BF4
B09 RB241BF4
B11 RB211BF4
C09 RB251BF4
C11 RD171AS4
D09 RB261BF4
D11 MC101AY4
E09 RB271BF4
E11 MC101AQ4

E2 DOUBLE CARD
E3 5804619 4619

RB161 01 02 03 04 05 06 07 08 09 10 12 13 14
RB171 15
RB161 16
RB171 17 18 19 20 21 22 23 24 25 27 28 29 30
RB161 31 32 33
RB161 34 35 36 37 38 39 40 41 42 43
RB171 44 45 46 47 48 49 50 51
RB161 52
RB171 53 54
RB161 55 56 57 58
RB171 59 60 61 62
RB161 63 64
RB171 65 66
RB161 67
RB171 68
RB161 69
RB171 70

E4 DOUBLE CARD
E5 5806255 6255

RD131 01 02 03 04 05 06 07 08 09 10 11 12 13 14
RA161 15 16 17 18 19 20 21 22 23 24 25 26 27 28 29 30 31 32 33 34 35 36
RA171 37 38 39 40 41 42 43 44 45 46 47 48 49 50 51 52 53 54 55 56 57 58
RQ131 59 60 61 62 64 65 66 67 68 69 70 71 72 73 74 75 80 81 82 83 84 85
RD131 86
RA171 87 88
RA161 89 90
RA171 91

E8 CONNECTOR
C06 KM211AS4
E06 KM212BC4

F1 CONNECTOR
A11 KU101AF4
B11 MC101AW4
C09 KR111BE4
C11 WZ061AH4
D09 KR111BF4
E09 KU301AT2
E11 KU301AT6

F2 SINGLE CARD
5803016 3016

MB101 A1 A2 A3 A4 A5 A6 A7 A8 A9

F3 SINGLE CARD
5803757 3757

KG101 A1
KG111 A3 A4
KG101 A5 A6
KG111 A7
KG101 A8
KG111 A9
KG101 AA AC
KG111 AD
KG101 AE
KG111 AF
KG121 B1 B2 C1 C2

F4 SINGLE CARD
5803757 3757

KG121 A1 A2
KG111 A3
KG141 A5 A6
KG131 A7
KG121 A8
KG111 A9
KG141 AA
KG121 AC
KG111 AD
KG141 AE
KG131 AF B1 B2 C1 C2

F5 SINGLE CARD
5803757 3757

KG151 A1 A4
KG141 A5 A6
KG131 A7
KG151 A8 A9
KG141 AA
KG151 AC AD
KG141 AE
KG131 AF
KG151 B1 B2 C1 C2

F6 SINGLE CARD DISK
5803028 3028

MB201 A1 A2 A3 A4 A5 A6 A7 A8 A9

F7 SINGLE CARD
5800000 0000

KU211 B1
KW101 C1 D1

UNUSED PORTIONS

A E F

F8 CONNECTOR
A06 KA101BE6
B06 KU201AE4
C04 KG231BD4
C06 KU211AL4
D04 KC101AQ6

G1 CONNECTOR
A09 MB111AN4
A11 MB111AM4
E09 MB111AA4
E11 MC101AY4

G2 SINGLE CARD
5800533 0533

MB101 A1 A2 B1 B2 C1 D1

G3 SINGLE CARD
5803757 3757

KG101 A1
KG111 A3 A4
KG101 A5 A6
KG111 A7
KG101 A8
KG111 A9
KG101 AA AC
KG111 AD
KG101 AE
KG111 AF
KG121 B1 B2 C1 C2

G4 SINGLE CARD
5803757 3757

KG121 A1 A2
KG111 A3
KG141 A5 A6
KG131 A7
KG121 A8
KG111 A9
KG141 AA
KG121 AC
KG111 AD
KG141 AE
KG131 AF B1 B2 C1 C2

G5 SINGLE CARD
5803757 3757

KG151 A1 A4
KG141 A5 A6
KG131 A7
KG151 A8 A9
KG141 AA
KG151 AC AD
KG141 AE
KG131 AF
KG101 B1 B2
KG151 C1 C2

G6 SINGLE CARD CS
5800236 0236

MB201 A1 B1 C1 D1 E1 F1

G8 CONNECTOR
E06 MB201AT2

H1 CONNECTOR
A09 MB111AA4
B09 MB111AC4
B11 MB111AB4
C09 MB111AE4
C11 MB111AD4
D11 MC101AY4
E11 MC101AQ4

H2 DOUBLE CARD
H3 5804619 4619

RB201 01 02 03 04 05 06 07 08 09 10 12 13 14
RB211 15
RB201 16
RB211 17 18 19 20 21 22 23 24 25 27 28 29 30
RB201 31 32 33
RB201 34 35 36 37 38 39 40 41 42 43
RB211 44 45 46 47 48 49 50 51
RB201 52
RB211 53 54
RB201 55 56 57 58
RB211 59 60 61 62
RB201 63 64
RB211 65 66
RB201 67
RB211 68
RB201 69
RB211 70

H4 DOUBLE CARD
H5 5806255 6255

RD141 01 02 03 04 05 06 07 08 09 10 11 12 13 14
RA201 15 16 17 18 19 20 21 22 23 24 25 26 27 28 29 30 31 32 33 34 35 36
RA211 37 38 39 40 41 42 43 44 45 46 47 48 49 50 51 52 53 54 55 56 57 58
RQ141 59 60 61 62 64 65 66 67 68 69 70 71 72 73 74 75 80 81 82 83 84 85
RD141 86
RA211 87 88
RA201 89 90
RA211 91

H6 SINGLE CARD DISK
5803796 3796

XF231 01 02 03 04 05 06 07 08 09 10 11 12 13 14 15 16 17 18 19 20 21 22 23 24 25 26 27 28 29 30 31 32 33 34 35 36 37 38 39 40 41 42 43 44 45 46 47 48

H8 CONNECTOR
A04 MB201AT2
A06 MB201AT4
B06 MB201AT6
C06 KM211AS4
E06 KM211BC4

J1 CONNECTOR
A11 MB111AH4
B11 MC101AW4
C09 MB111AG4
C11 MB111AF4
D09 MB111AJ4
D11 MB111AH4
E09 MB111AL4
E11 MB111AK4

J2 DOUBLE CARD
J3 5804619 4619

RB221 01 02 03 04 05 06 07 08 09 10 12 13 14
RB231 15
RB221 16
RB231 17 18 19 20 21 22 23 24 25 27 28 29 30
RB221 31 32 33
RB221 34 35 36 37 38 39 40 41 42 43
RB231 44 45 46 47 48 49 50 51
RB221 52
RB231 53 54
RB221 55 56 57 58
RB231 59 60 61 62
RB221 63 64
RB231 65 66
RB221 67
RB231 68
RB221 69
RB231 70

J4 DOUBLE CARD
J5 5806255 6255

RD151 01 02 03 04 05 06 07 08 09 10 11 12 13 14
RA221 15 16 17 18 19 20 21 22 23 24 25 26 27 28 29 30 31 32 33 34 35 36
RA231 37 38 39 40 41 42 43 44 45 46 47 48 49 50 51 52 53 54 55 56 57 58
RQ151 59 60 61 62 64 65 66 67 68 69 70 71 72 73 74 75 80 81 82 83 84 85
RD151 86
RA231 87 88
RA221 89 90
RA231 91

J6 SINGLE CARD DISK
5803793 3793

XF221 01 02 03 04 05 06

SOCKET LISTING
DATE 03-09-71 MACH. 1131-C

LOG 1202 BOARD 01B-B1
PREV. ENGR. - -
PRES. ENGR. 03-09-71 571150
P.N. 5889393

IBM CORP. GSD BLK.

ACO05000

J6
07 08 09 10 11 12
13 14 15 16 17 18
19 20 21 22 23 24
25 26 27 28 29 30
31 32 33 34 35 36
37 38 39 40 41 42

J8 CONNECTOR
A06 KM211AV4

K1 CONNECTOR
A09 MB111AN4
A11 MB111AM4
E09 RB221BH6
E11 WZ061AE4

K2 DOUBLE CARD
K3 5804619 4619

RB241 01 02 03 04 05 06
07 08 09 10 12 13
14
RB251 15
RB241 16
RB251 17 18 19 20 21 22
23 24 25 27 28 29
RB241 30
RB251 31 32 33
RB241 34 35 36 37 38 39
40 41 42 43
RB251 44 45 46 47 48 49
50 51
RB241 52
RB251 53 54
RB241 55 56 57 58
RB251 59 60 61 62
RB241 63 64
RB251 65 66
RB241 67
RB251 68
RB241 69
RB251 70

K4 DOUBLE CARD
K5 5806255 6255

RD161 01 02 03 04 05 06
07 08 09 10 11 12
13 14
RA241 15 16 17 18 19 20
21 22 23 24 25 26
27 28 29 30 31 32
33 34 35 36
RA251 37 38 39 40 41 42
43 44 45 46 47 48
49 50 51 52 53 54
55 56 57 58
RQ161 59 60 61 62 64 65
66 67 68 69 70 71
72 73 74 75 80 81
82 83 84 85
RD161 86
RA251 87 88
RA241 89 90
RA251 91

K6 SINGLE CARD
5803024 3024

RB301 A1 A2 A3 A4 B1 B2
B3 B4

K7 SINGLE CARD
5803022 3022

KR101 A1 A2 A3 A4 A5 A6
A7 A8 A9

K8 CONNECTOR
E04 KD101AW4
E06 WZ061AJ4

L1 CONNECTOR
A09 RB221BH6
A11 WZ061AB4
B09 RB231BH6
B11 WZ061AC4
C09 RB241BH6
C11 WZ061AD4
D09 RB251BH6
D11 WZ061AE4
E09 RB261BH6
E11 WZ061AF4

A
C
0L2 DOUBLE CARD
0L3 5804619 4619
5

RB261 01 02 03 04 05 06
07 08 09 10 12 13
14
RB271 15
RB261 16
RB271 17 18 19 20 21 22
23 24 25 27 28 29
RB261 30
RB271 31 32 33
RB261 34 35 36 37 38 39
40 41 42 43
RB271 44 45 46 47 48 49
50 51
RB261 52
RB271 53 54
RB261 55 56 57 58
RB271 59 60 61 62
RB261 63 64
RB271 65 66
RB261 67
RB271 68
RB261 69
RB271 70

L4 DOUBLE CARD
L5 5806255 6255

RD171 01 02 03 04 05 06
07 08 09 10 11 12
13 14
RA261 15 16 17 18 19 20
21 22 23 24 25 26
27 28 29 30 31 32
33 34 35 36
RA271 37 38 39 40 41 42
43 44 45 46 47 48
49 50 51 52 53 54
55 56 57 58
RQ171 59 60 61 62 63 64
65 66 67 68 69 70
71 72 73 74 75 80
81 82 83 84 85
RD171 86
RA271 87 88
RA261 89 90
RA271 91

L6 SINGLE CARD
5803024 3024

RB311 A1 A2 A3 A4 B1 B2
B3 B4

L7 SINGLE CARD
5803022 3022

KR101 A1 A2 A3 A4 A5 A6
A7 A8 A9

L8 CONNECTOR
A04 WZ061AJ4
A06 KM211AU4
B04 KD101AT2
B06 XC141BJ4
C04 KM321BG4
C06 DN201AL4
D04 KM211BC4
E04 KM211AV4
E06 DN201AZ4

M1 CONNECTOR
A11 WZ061AJ4
B09 RB271BH6
B11 WZ061AG4
C09 KR111BE4
C11 WZ061AH4
D09 KR111BF4
D11 WZ061AJ4

M2 CONNECTOR
B02 RB121BJ2
B03 RB141BJ2
B04 RB161BJ2
B05 RB201BJ2
B07 RB221BJ2
B08 RB241BJ2
B09 RB261BJ2
B10 RA101AU2
B12 RA121AU2
D02 RB131BJ2
D04 RB151BJ2
D05 RB171BJ2
D06 RB211BJ2
D07 RB231BJ2
D09 RB251BJ2
D10 MB101AA4
D11 RA111AU2
D12 RA131AU2

M3 CONNECTOR
B02 RB101BH2
B03 RB121BH2
B04 RB141BH2
B05 RB161BH2
B07 RB201BH2
B08 RB221BH2
B09 RB241BH2
B10 RB261BH2
B12 RA201AU2
B13 RA221AU2
D02 RB111BH2
D04 RB131BH2
D05 RB151BH2
D06 RB171BH2
D07 RB211BH2
D09 RB231BH2
D10 RB251BH2
D11 RB271BH2
D12 RA211AU2
D13 RA231AU2

M4 SINGLE CARD
5803807 3807

KG201 A1 A2 A3 A4 A5 A6
KU101 B1 C1 C2 C3

M5 SINGLE CARD
5803291 3291

BB101 A1
BB111 B1 C1
BB121 D1 E1
BB131 F1 G1
BB141 H1
BB101 K1 L1
BB111 M1
BB121 N1
BB131 P1 Q1
BB141 R1 U1

UNUSED PORTIONS

J S T V

M8 CONNECTOR
A06 KM201AN4
B06 RN111AT6
C04 RB231BF4
C06 KM201AL4
D04 KU211AF4
E04 KM211AT4
E06 KM201AS4

N2 CONNECTOR
B02 RB121AQ2
B03 RB141AQ2
B04 RB161AQ2
B05 RB201AQ2
B07 RB221AQ2
B08 RB241AQ2
B09 RB261AQ2
B10 RA141AU2
B12 RA161AU2
D02 RB131AQ2
D04 RB151AQ2
D05 RB171AQ2
D06 RB211AQ2
D07 RB231AQ2
D09 RB251AQ2
D10 RB271AQ2
D11 RA151AU2
D12 RA171AU2

N3 CONNECTOR
B02 RQ101AY2
B03 RQ111AY2
B04 RQ121AY2
B05 RQ131AY2
B07 RQ141AY2
B08 RQ151AY2
B09 RQ161AY2
B10 RQ171AY2
B12 RA241AU2
B13 RA261AU2
D02 RQ101AX2
D04 RQ111AX2
D05 RQ121AX2
D06 RQ131AX2
D07 RQ141AX2
D09 RQ151AX2
D10 RQ161AX2
D11 RQ171AX2
D12 RA251AU2
D13 RA271AU2

N4 CONNECTOR
B02 RD101AP2
B03 RD111AP2
B04 RD121AP2
B05 RD131AP2
B07 RD141AP2
B08 RD151AP2
B09 RD161AP2
B10 RD171AP2
B13 RB111BJ2
D02 RD101AQ2
D04 RD111AQ2
D05 RD121AQ2
D06 RD131AQ2
D07 RD141AQ2
D09 RD151AQ2
D10 RD161AQ2
D11 RD171AQ2
D13 RB111AQ2

N5 CONNECTOR
B02 BB101AA4
B03 BB101AC4
B04 BB111AB4
B05 BB121AA4
B07 BB121AC4
B08 BB131AB4
B09 BB131AD4
B10 BB141AB4
B12 XF251AQ4
B13 KM321BG4
D02 BB101AB4
D04 BB111AA4
D05 BB111AC4
D06 BB121AB4
D07 BB131AA4
D09 BB131AC4
D10 BB141AA4
D11 BB141AC4
D12 XF141AW4
D13 XF141BC4

N6 CONNECTOR
B02 RB301AA4
B03 RB301AC4
B04 RB301AE4
B05 RB301AG4
B07 RB311AA4
B08 RB311AC4
B09 RB311AE4
B10 RB311AG4
B12 KW101BE4
D02 RB301AB4
D04 RB301AD4
D05 RB301AF4
D06 RB301AH4
D07 RB311AB4
D09 RB311AD4
D10 RB311AF4
D11 RB311AH4
D12 XF141AZ4

N8 CONNECTOR
A04 KM101AV2
A06 KM201AC4

PLUG LIST

PART NO	ACC	TYPE	SOCKETS					TOTAL
5800000		0000	F7					01
5800236		0236	C7					01
5800236	CS	0236	G6					01
5800238		0238	D7					01
5800533		0533	G2					01
5803016		3016	F2					01
5803022		3022	K7	L7				02
5803024		3024	K6	L6				02
5803028	DISK	3028	F6					01
5803291		3291	M5					01
5803686		3686	C6					01
5803757		3757	F3	F4	F5	G3		06
			G4	G5				
5803793	DISK	3793	J6					01
5803796	DISK	3796	H6					01
5803807		3807	M4					01
5804619		4619	B2	C2	D2	E2		08
			H2	J2	K2	L2		
5806255		6255	B4	C4	D4	E4		08
			H4	J4	K4	L4		
		CONN	A1	A2	A3	A4		36
			A5	A8	B1	B8		
			C1	C8	D1	D8		
			E1	E8	F1	F8		
			G1	G8	H1	H8		
			J1	J8	K1	K8		
			L1	L8	M1	M2		
			M3	M8	N2	N3		
			N4	N5	N6	N8		

SOCKET LISTING
DATE 03-09-71 MACH. 1131-C

LOG 1202 BOARD 01B-B1
PREV. ENGR. - -
PRES. ENGR. 03-09-71 571150
P.N. 5889393

IBM CORP. GSD BLK.

A
C
0
0
0
5
000

JUMPERS AND TIE DOWNS

CONFIGURATION	FUNCTION	NET NO.	FROM-TO
NO. 1132	+ REQ INT LVL 1	DUI21BB4	A-CIK3B13-K3D08
NO. 1132	+ CS LVL 1	KM21IAV4	B-AIF7D11-F7D08
1627 MOD I	BUSY SS-1	XG101AY4	A-CIM4G07-M4J11
1627 MOD I	BUSY SS-2	XG101AZ4	A-CIM4G09-M4B13
1627 MOD II	BUSY SS-1	XG101AY4	A-CIM4G07-M4G13
1627 MOD II	BUSY SS-2	XG101AZ4	A-CIM4G09-M4B12
NO 1442	+ REQ INT LVL 0	XM201AY4	B-AIJ7B13-J7D08
1134 OR 1055	- PT RESPONSE	XT301BH4	A-CIA7B04-E6B12
1055 AND NO 1134	+ PT STATUS BUSY	XT101BP4	A-BIM4B10-M4D08
1134 OR 1055	- PT RESPONSE	FAI71TA4	A-CIA7D05-N6D05
1134 OR 1055	- PT RESPONSE	FAI71TC4	B-AIA7D05-K6B13

SINGLE SHOT TIMING

NAME	PAGE	ADJUSTABLE LOCATION		TIME	TOL
TWR SS-1	XW101	A-CIF5B03	TOP	25ms	± 3ms
TWR SS-2	XW101	A-CIF5B07	BOT	25ms	± 3ms
KBD SS-1	XK101	A-CIE3B03	TOP	25ms	± 3ms
KBD SS-2	XK101	A-CIE3B07	BOT	25ms	± 3ms
READ CHK SS	XR301	A-BIK3B03	TOP	100us	± 12us
PUNCH GT SS	XR301	A-BIK3B07	BOT	350us	± 42us
DISK R/W SS	XF181	A-CIM6J13		250us	± 28us
SETTLE SS	XF181	A-CIL2D13		22.5ms	± 2ms
PT RDR SS	XT301	A-BIG3B07	BOT	500us	± 60us

NAME	PAGE	FIXED LOCATION	TIME	TOL
CB SS	XP131	B-AIJ6D11	4ms	± .5ms
READ INT SS	XP131	B-AIJ7D11	4ms	± .5ms
USE METER SS	KW101	A-CIG7B02	400ms	± 100ms
DISK SS	XF171	A-CIM6J06	28ms	± 5ms
SS-1 (1627-I)	XG101	A-CIM4J07	1.9ms	± .3ms
SS-1 (1627-II)	XG101	A-CIM4J07	2.9ms	± .4ms
SS-2 (1627-I)	XG101	A-CIM4G04	19ms	± .3ms
SS-2 (1627-II)	XG101	A-CIM4G04	2.9ms	± .4ms
1627 SS-3	XG111	A-CIM4J09	50ms	± 8ms
1627 SS-4	XG111	A-CIM4G10	50ms	± 8ms

CE INDICATOR CARD LAYOUT

DISK FILE
WORD COUNT REGISTER A-CIT5 XF021

BIT 10	BIT 11	BIT 12	BIT 13	BIT 14	BIT 15
BIT 7	BIT 8	BIT 9	SPARE 7	SPARE 8	SPARE 9

DISK FILE A-CIT8 XF011

NOT READY	CYCLE STEAL LVL 0	WRITE SELECT	READ SELECT	RD/WR CONDITION	ACCESS HOME
SPARE 1	SPARE 2	SPARE 3	SPARE 4	SPARE 5	SPARE 6

MACHINES WITH 4K CORE STORAGE WILL HAVE THE FOLLOWING DELETIONS TO DISABLE UPPER 4K:
DELETE B-BIF2D02 CARD SIDE AND B-BIF6D02- CARD SIDE
MACHINES BEING CONVERTED FROM 4K TO 8K STORAGE WILL REQUIRE THE FOLLOWING WIRE ADDITIONS:
ADD B-BIF2D02 TO F6D02 AND B-BIF2D02 TO H1A09 AND B-BIF6D02 TO G1E09

BACK-PANEL CAPACITOR
.22UFD P/N 842607
A-CIN6D02 - L6D08
SEE KRIII AND YP161

ADDITIVE CARD CODES

BLANK	BASIC
CS	CYCLE STEAL
CSA	DISK OR 1132
C67	1442-6 OR 7
C567	1442-6 OR 7
DISK	DISK STOR
PR	1132-2
PL	1627
PTPL	1134
PTR	1134
PTRP	1134/1055
PTP	1055

OSCILLATOR ADJUSTMENTS

CPU OSCILLATOR - LOCATION: B-A1E5 FIXED FREQUENCY

SJ-4 (2.25 MHZ): + PH A (KAIII, B-A1C4J05) AND + PH B (KAIII, B-A1C4J10) ARE TO BE EQUAL WIDTH WITHIN ± 10% WHEN MEASURED AT THE 1 VOLT LEVEL.

PAPER TAPE OSCILLATOR - LOCATION A-B1K3

FREQUENCY: THE PERIOD OF THE WAVEFORM (XT331, A-B1H4B09) MUST BE 8.35MS ± .25MS (TOP POT).

SYMMETRY: + OSCILLATOR TRIGGER (XT331, A-B1H4B09) MUST BE 4.5MS ± .5MS IN DURATION (BOTTOM POT)

EC HISTORY		DRAWING TITLE
10FEB71	571150	TIE DOWNS-ADJUSTMENTS AND
3JUN71	571152	MACH 1131-C GENERAL INFO
28DEC71	571154	PART NO 5889418
10APR72	571155	CLASSIFICATION
6JUN72	571156	

D

IBM CORP

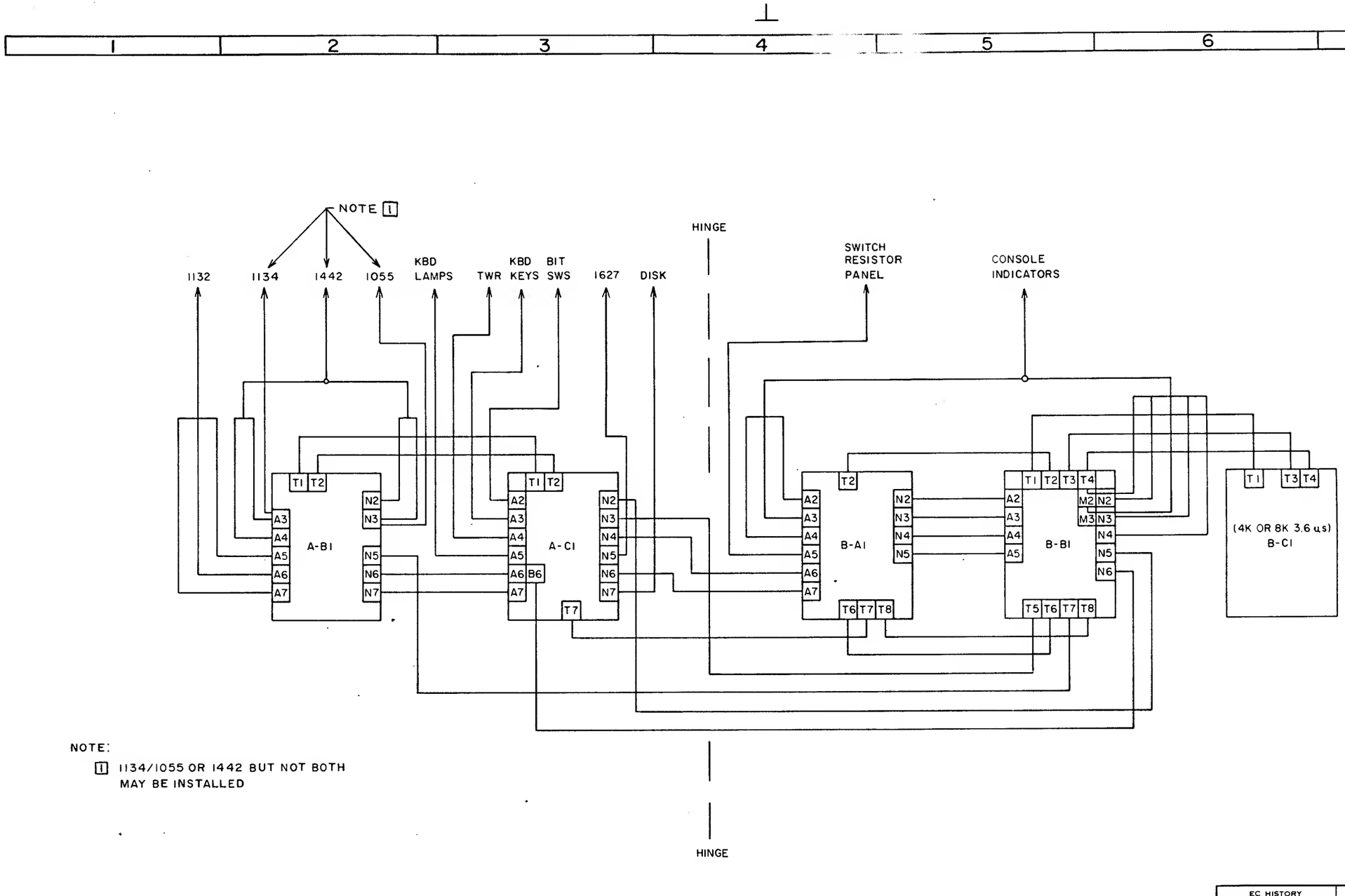

NOTE:

[1] 1134/1055 OR 1442 BUT NOT BOTH MAY BE INSTALLED

EC HISTORY		DRAWING TITLE
10FEB71	571150	SIGNAL CABLING
10APR72	571155	MACH 1131-C
		PART NO 5889419
		CLASSIFICATION

D

IBM CORP

AE000

AE000

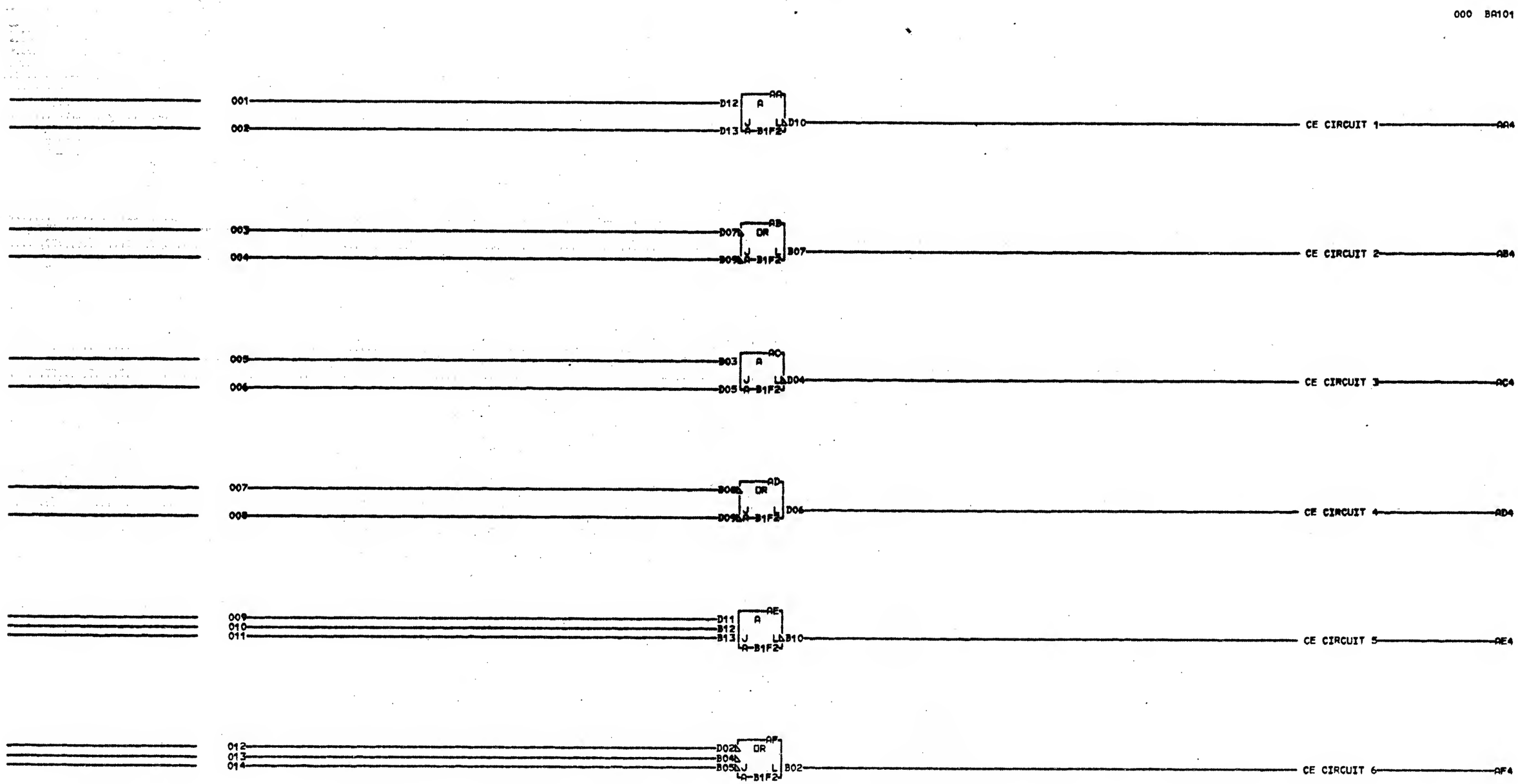

LOC. TYPE
A-B1F2 0000

CE CARD

E.C.-HISTORY

MACH.1131-C
FRAME 01
IBM CORP. GPD
P.N. 5889189

DATE LAST EC
02-09-71 571150

BA101 000

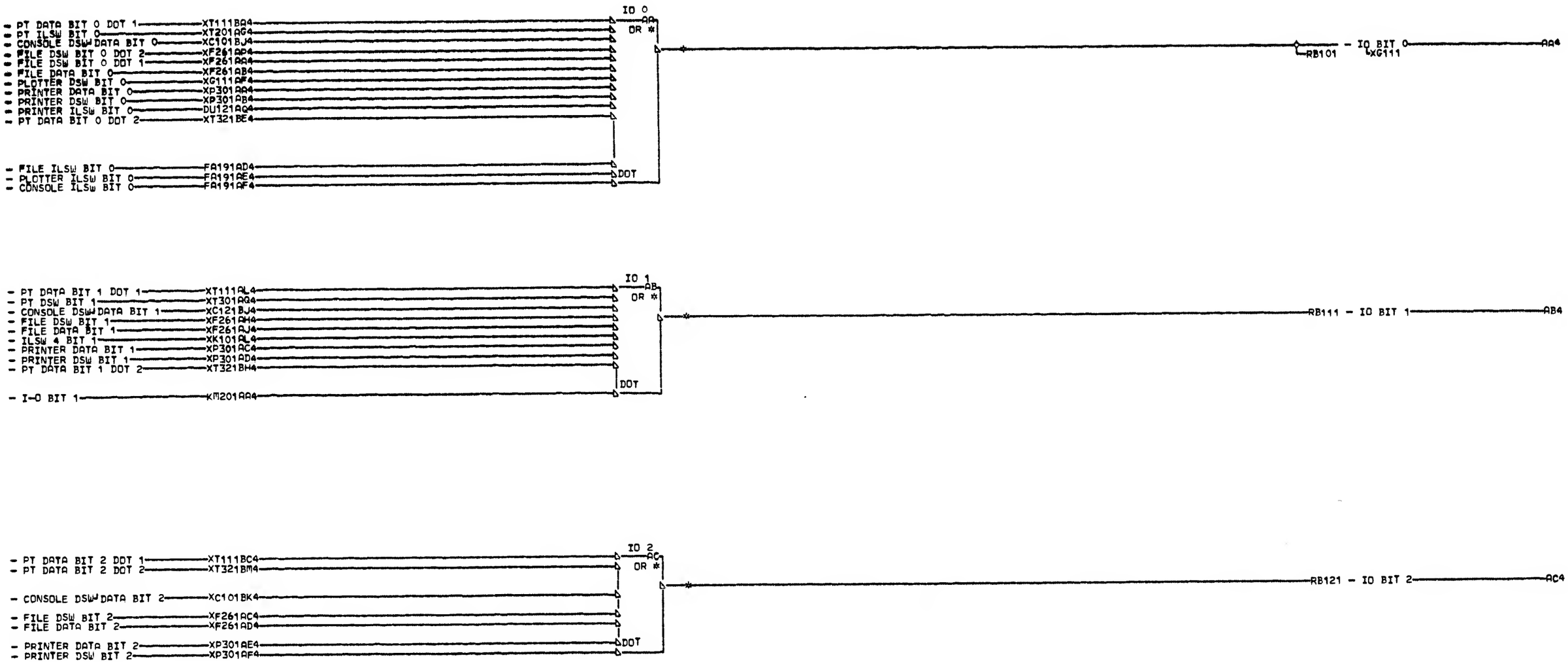

B
B
1
0
1

004
SIM TO PN 5889190 EC 571150

AA4 B-B1N5B02 01A-B1A1E09
01A-C1N2B02 RESISTOR
01A-C1B1A11 B-B1M5D02
01A-B1B1A11 AC4 B-B1N5B03
RESISTOR 01A-C1N2B03
B-B1M5B02 01A-C1B1B11
AB4 B-B1N5D02 01A-B1B1B11
01A-C1N2D02 RESISTOR
01A-C1A1E09 B-B1M5B03

LOC. TYPE
B-B1M5 3291

INPUT-OUTPUT BUS
BITS 0 1 2
-E.C.-HISTORY- MACH.1131-C
FRAME 01
IBM CORP. GSD
DATE LAST EC
03-14-72 571155
P.N. 5889455

B
B
1
0
1
004

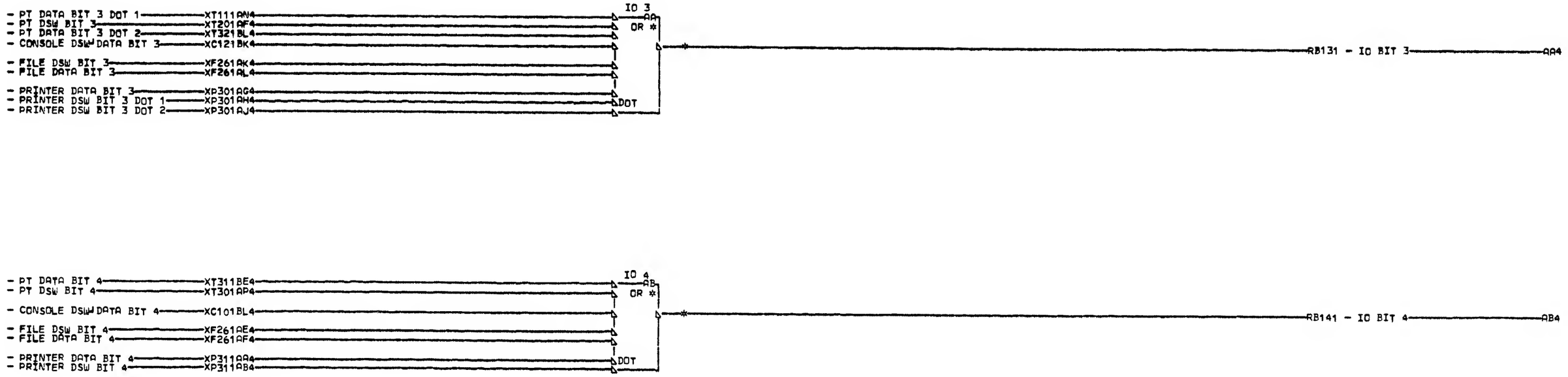

		AA4	B-B1N5D04	01A-C1N2B04	RESISTOR
B			01A-C1N2D04	01A-C1B1C11	B-B1M5D05
B			01A-C1B1A09	01A-B1B1C11	
1			01A-B1B1A09	RESISTOR	
1			01A-C1A1E11	B-B1M5B04	
			01A-B1A1E11	AC4 B-B1N5D05	
			RESISTOR	01A-C1N2D05	
004			B-B1M5D04	01A-C1B1B09	
	SIM TO PN 5889191 EC 571150	AB4	B-B1N5B04	01A-B1B1B09	

LOC. TYPE
B-B1M5 3291

INPUT-OUTPUT BUS BITS 3 4 5	B
—E.C.—HISTORY— MACH.1131-C	B
	1
FRAME 01	1
	1
IBM CORP. GSD	
DATE LAST EC	004
03-14-72 571155 P.N. 5889456	

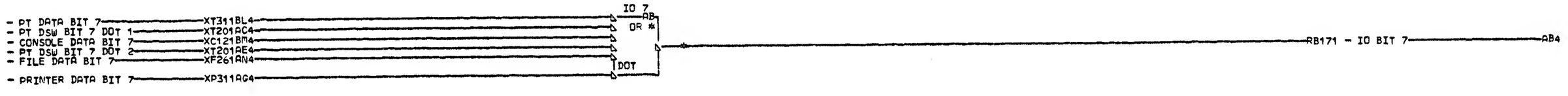

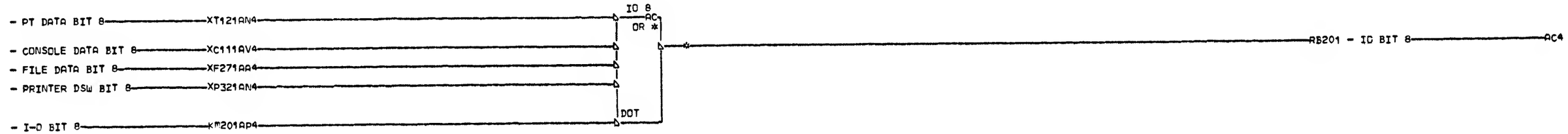

		AA4 B-B1N5B05	01A-C1N2D06	RESISTOR
B		01A-C1N2B05	01A-C1B1C09	B-B1M5B07
B		01A-C1C1E11	01A-B1B1C09	
1		01A-B1C1E11	RESISTOR	
2		01A-C1B1D11	B-B1M5D06	
1		01A-B1B1D11	AC4 B-B1N5B07	
		RESISTOR	01A-C1N2B07	
		B-B1M5B05	01A-C1B1E11	
004		AB4 B-B1N5D06	01A-B1B1E11	

SIM TO PN 5889192 EC 571150

LOC. TYPE
B-B1M5 3291

INPUT-OUTPUT BUS
BITS 6 7 8

E.C. HISTORY — MACH.1131-C

FRAME 01

IBM CORP. GSD

DATE LAST EC
03-14-72 571155

P.N. 5889457

B B 1 2 1 004

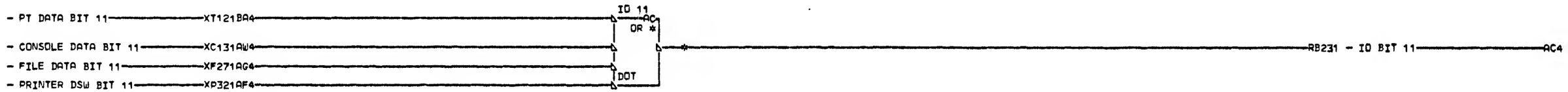

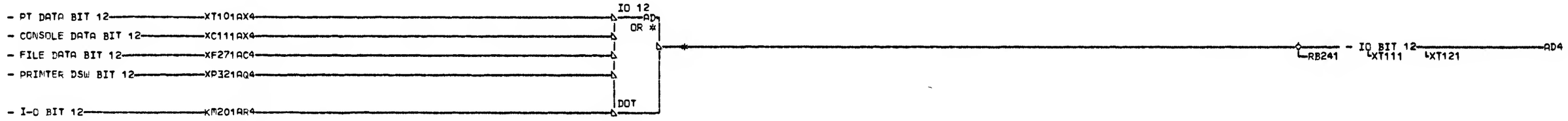

B
B
1
3
1

004
SIM TO PN 5889193 EC 571150

AA4 B-B1N5D07
01A-C1N2D07
01A-C1B1D09
01A-B1B1D09
RESISTOR
B-B1M5D07
AB4 B-B1N5B08
01A-C1N2B08
01A-C1C1A11
01A-B1C1A11
RESISTOR
B-B1M5D09
AC4 B-B1N5D09
01A-C1N2D09
01A-B1B1E09
RESISTOR
B-B1M5B08
01A-B1B1E09
RESISTOR
B-B1M5D09
AD4 B-B1N5B09
01A-C1N2B09
01A-C1C1B11
01A-B1C1B11
RESISTOR
B-B1M5B09

LOC. TYPE
B-B1M5 3291

INPUT-OUTPUT BUS
BITS 9 10 11 12
-E.C.-HISTORY-
mACH.1131-C
FRAME 01
IBM CORP. GSD
DATE LAST EC
03-14-72 571155
P.N. 5889458

B
B
1
3
1
004

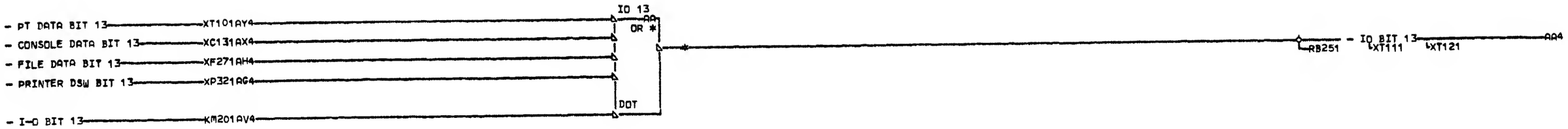

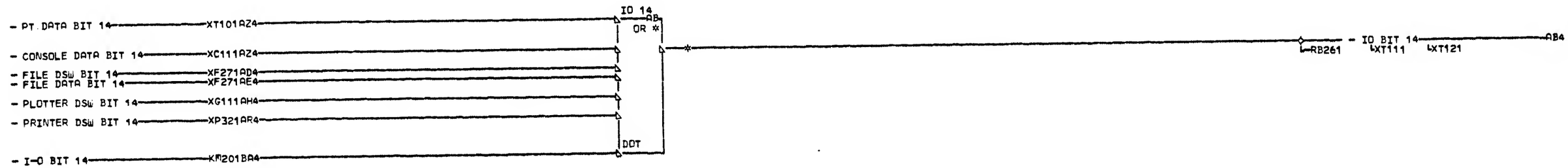

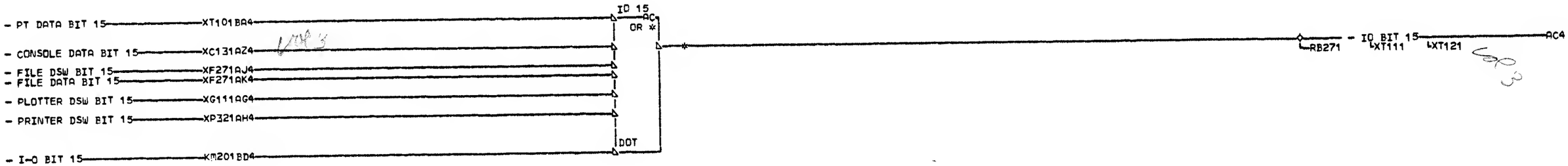

B
B
1
4
1

004
SIM TO PN 5889194 EC 571150

AA4 B-B1N5D10 01A-B1C1C11
01A-C1N2D10 RESISTOR
01A-C1C1B09 B-B1M5B10
01A-B1C1B09 AC4 B-B1N5D11
RESISTOR 01A-C1N2D11
B-B1M5D10 01A-C1C1C09
AB4 B-B1N5B10 01A-B1C1C09
01A-C1N2B10 RESISTOR
01A-C1C1C11 B-B1M5D11

LOC. TYPE
B-B1M5 3291

INPUT-OUTPUT BUS
BITS 13 14 15
E.C. HISTORY | MACH.1131-C | B B 1 4 1
FRAME 01
IBM CORP. GSD
DATE LAST EC
03-14-72 571155
P.N. 5889459 | 004

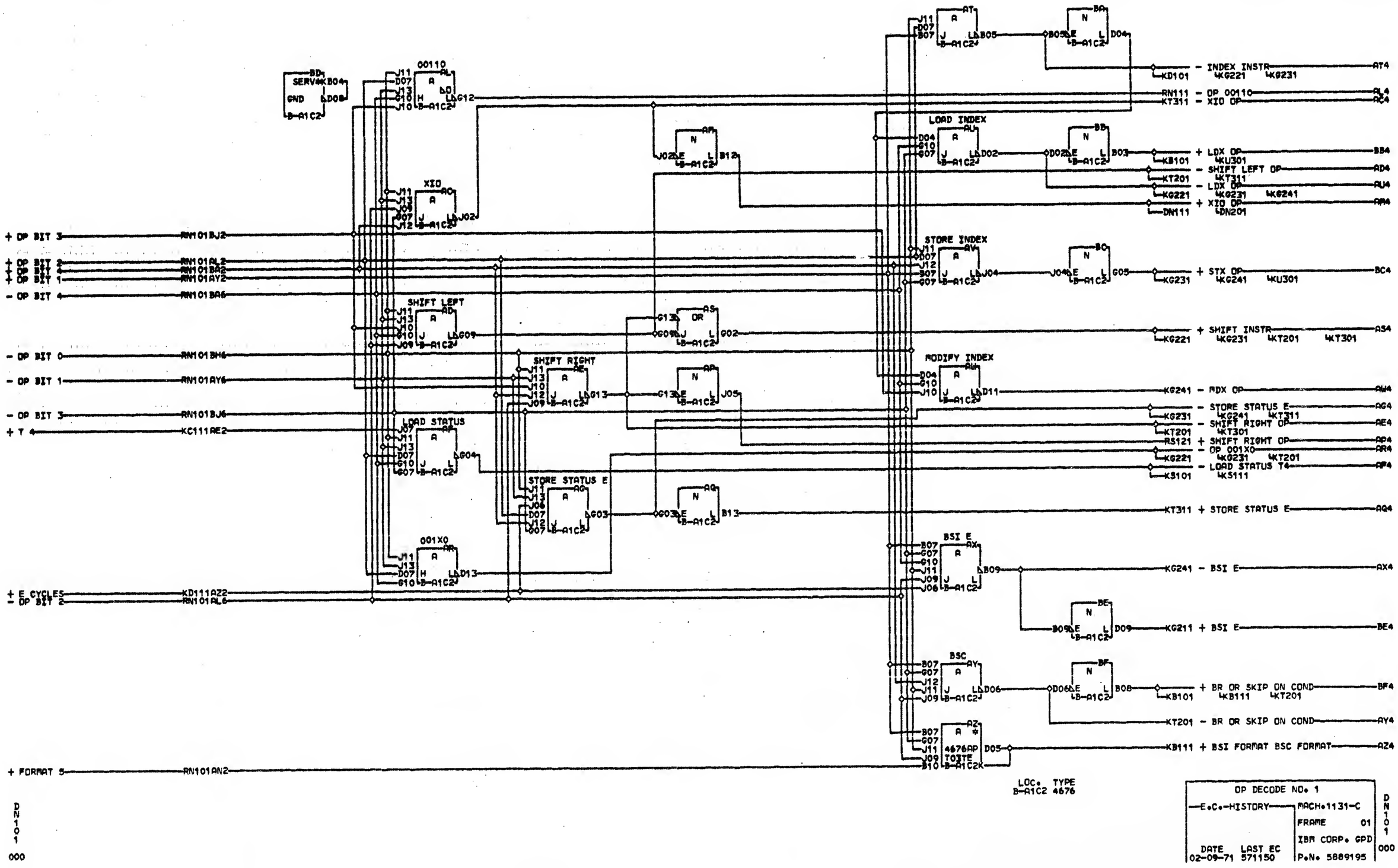

DN101
000

OP DECODE NO. 1		
E.C.-HISTORY	MACH.1131-C	DN101
	FRAME 01	
	IBM CORP. GPD	000
DATE LAST EC	P.N. 5889195	
02-09-71 571150		

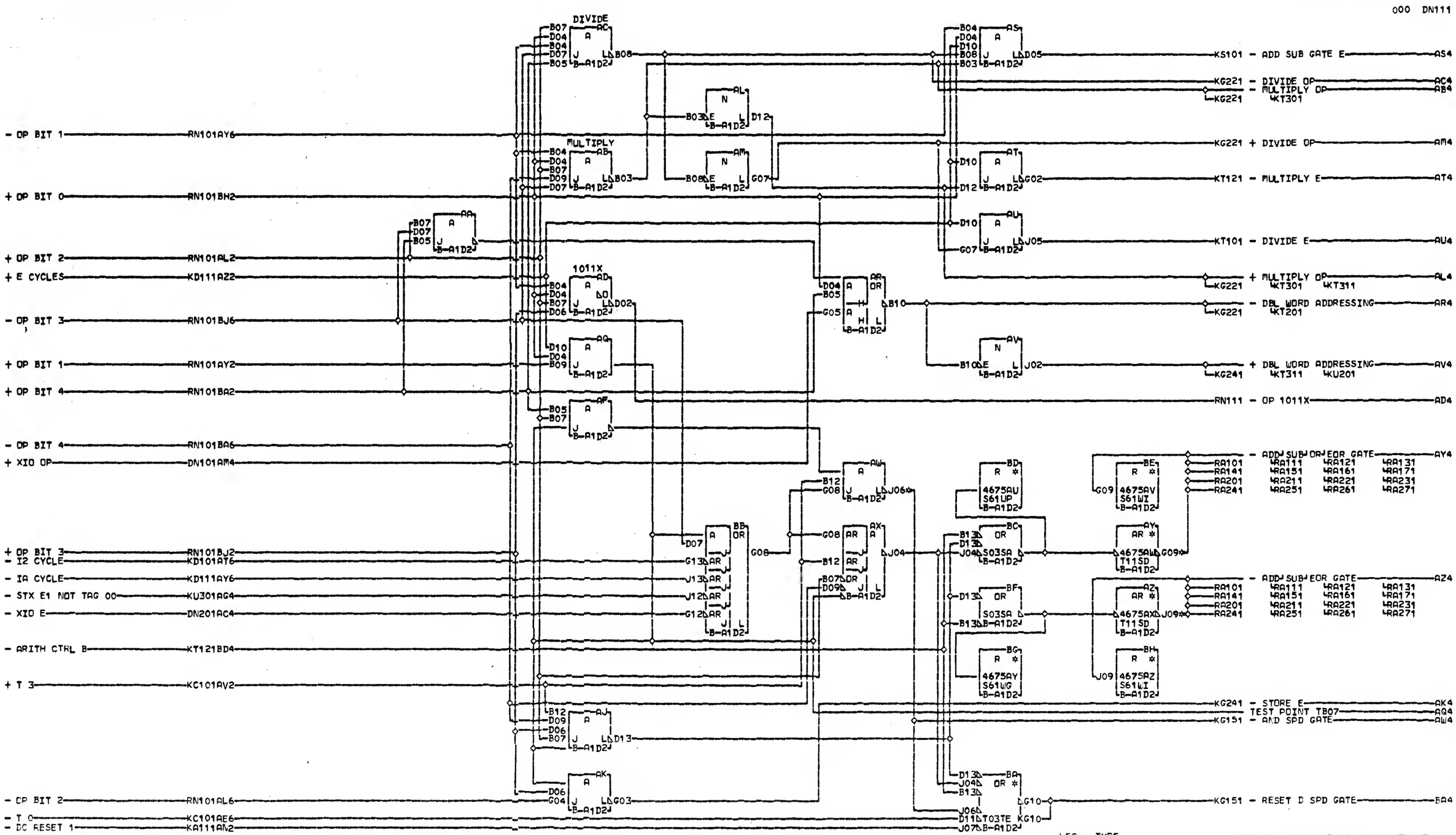
000 DN111
DIVIDE
MULTIPLY
1011X
- OP BIT 1 RN101AY6
+ OP BIT 0 RN101BH2
+ OP BIT 2 RN101AL2
+ E CYCLES KD111AZ2
- OP BIT 3 RN101BJ6
+ OP BIT 1 RN101AY2
+ OP BIT 4 RN101BA2
- OP BIT 4 RN101BA6
+ XIO OP DN101AM4
+ OP BIT 3 RN101BJ2
- I2 CYCLE KD101AT6
- IA CYCLE KD111AY6
- STX E1 NOT TAG 00 KU301AG4
- XIO E DN201AC4
- ARITH CTRL B KT121BD4
+ T 3 KC101AV2
- OP BIT 2 RN101AL6
- T 0 KC101AE6
- DC RESET 1 KA111AN2
KS101 - ADD SUB GATE E AS4
KG221 - DIVIDE OP AC4
- MULTIPLY OP AB4
KT301
KG221 + DIVIDE OP AM4
KT121 - MULTIPLY E AT4
KT101 - DIVIDE E AU4
+ MULTIPLY OP AL4
KT301 KT311
- DBL WORD ADDRESSING AR4
KT201
+ DBL WORD ADDRESSING AV4
KT311 KU201
RN111 - OP 1011X AD4
- ADD SUB OR EOR GATE AY4
RA101 RA111 RA121 RA131
RA141 RA151 RA161 RA171
RA201 RA211 RA221 RA231
RA241 RA251 RA261 RA271
- ADD SUB EOR GATE AZ4
KG241 - STORE E AK4
TEST POINT TB07 AQ4
KG151 - AND SPD GATE AW4
KG151 - RESET D SPD GATE BA4
4675AU S61UP
4675AV S61WI
4675AW T11SD
4675AX T11SD
4675AY S61WG
4675AZ S61WI
S03SA
T03TE
LOC. TYPE
B-A1D2 4675
AW4 B-A1N3B04
01B-B1A3B04
AY4 B-A1N4B10
01B-B1A4B10
AZ4 B-A1N4D10
01B-B1A4D10
000
CP DECODE NO. 2
E.C. HISTORY
MACH.1131-C
FRAME 01
IBM CORP. GPD
DATE LAST EC
02-09-71 571150
P.N. 5889196
000

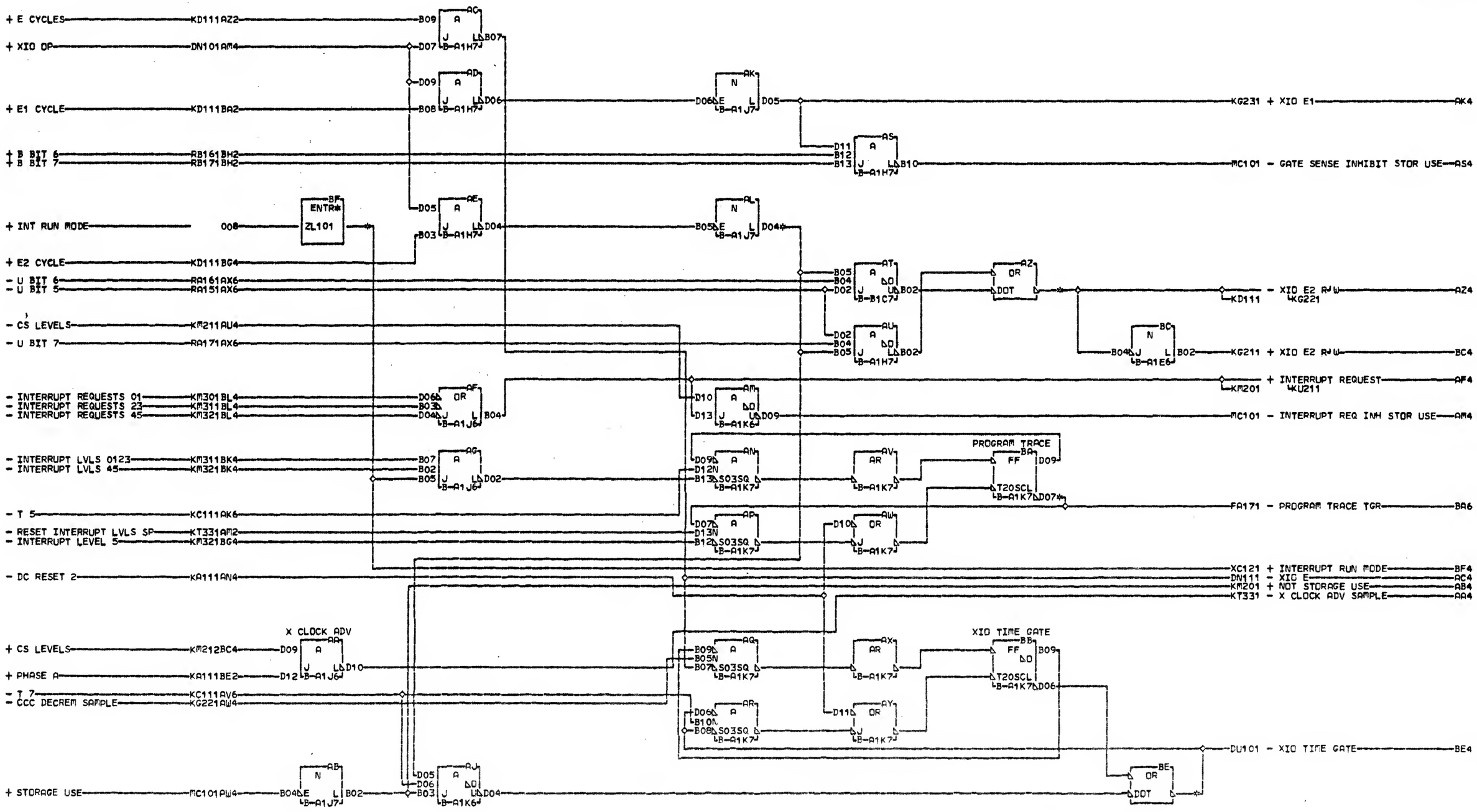

AL4	B-A1L8C06	01A-C1N6B05
01	B-B1L8C06	01A-C1A5D07
AZ4	B-A1L8E06	
01	B-B1L8E06	
BA6	B-A1A6D02	
01	A-C1N4D02	
BE4	B-A1A6B04	
01	A-C1N4B04	
BF4	B-A1A7B05	

LOC.	TYPE
B-A1E6	3421
B-A1H7	0000
B-A1J6	0069
B-A1J7	0509
B-A1K6	0238
B-A1K7	3794
B-B1C7	0236

XIO GATES X CLOCK ADV
PROGRAM TRACE
E.C. HISTORY — MACH 1131-C
FRAME 01
IBM CORP. GSD
DATE LAST EC 02-09-71 571150
P.N. 5889197

DN201 000

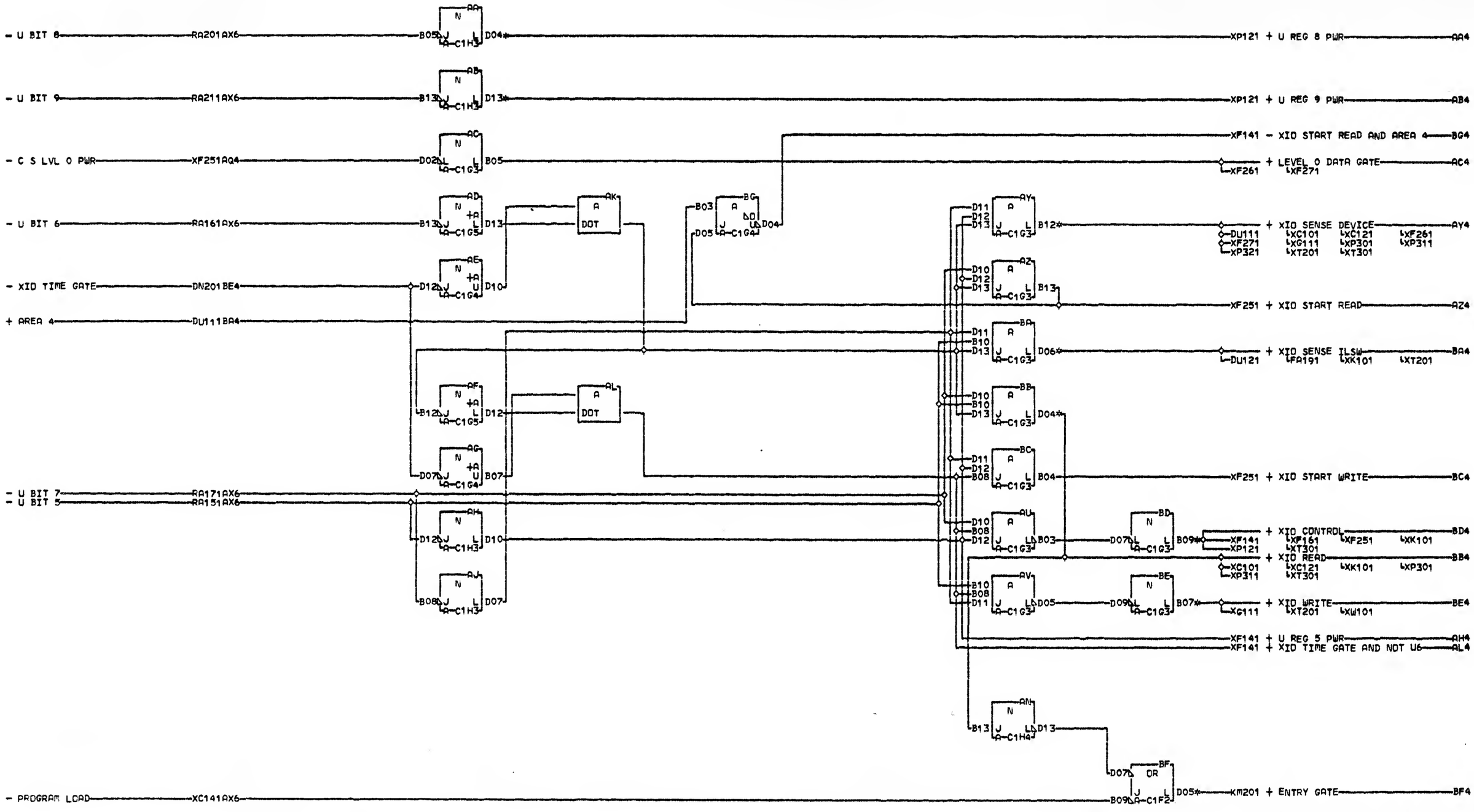

D U 1 0 1 004

SIM TC PN 5889198 EC 571150

AA4 A-C1F1B09 01A-B1E1B11
01A-B1F1B09 BD4 A-C1D1E11
AB4 A-C1F1C09 01A-C1E1D11
01A-B1F1C09 01A-B1E1D11
AY4 A-C1E1D09 01A-B1D1E11
01A-B1E1D09 BE4 A-C1E1B09
BA4 A-C1E1E09 01A-B1E1B09
01A-B1E1E09 BF4 A-C1N4B05
BB4 A-C1E1B11 01B-A1A6B05

LOC.	TYPE
A-C1F2	0533
A-C1G3	4008
A-C1G4	0236
A-C1G5	3421
A-C1H3	3016
A-C1H4	3421

FUNCTION DECODE AND ENTRY GT

E.C. HISTORY — MACH.1131-C

FRAME 01

IBM CORP. GSD

DATE LAST EC
03-14-72 571155

P.N. 5889460

D U 1 0 1 004

+ XIO SENSE DEVICE — DU101AY4
+ T6 PWR 2 — XC141AB4

- U BIT 15 — RA271AX6 — B02 — AA N J L LA-C1H3 — D02*
- U BIT 14 — RA261AX6 — B10 — AB N J L LA-C1H3 — D05*
- U BIT 13 — RA251AX6 — B04 — AC N J L LA-C1H3 — D06*
- U BIT 2 — RA121AX6 — B07
- U BIT 0 — RA101AX6 — B08
- U BIT 1 — RA111AX6 — B03
- U BIT 3 — RA131AX6
- U BIT 4 — RA141AX6

B03, B04, B05 — AE A J L LA-C1F2 — D02
B09 — AF N J L LA-C1H3 — D09
B12 — AG N J L LA-C1H3 — D11

D11, D13, B13 — AH A J L LA-C1F2 — D10 — D04 — AM N J L LA-C1F2 — B02*
B12, D11, D12 — AJ A J L LA-C1F2 — B10*
D13 — AK N E L LA-C1D3 — B13
B12 — AL N E L LA-C1D3 — B10

D13 — AD A J L LA-C1F2 — D06

D10, D12, D13 — AX A J L LA-C1F3 — B13
D11, B10, D13 — AY A J L LA-C1F3 — D06*
D10, B10, D13 — AZ A J L LA-C1F3 — D04*
D11, D12, B08 — BA A J L LA-C1F3 — B04
D10, D12, B08 — AT A J L LA-C1F3 — B03 — D07 — BB N L L LA-C1F3 — B09
D11, B08, B10 — AU A J L LA-C1F3 — D05 — D09 — BC N L L LA-C1F3 — B07*
D10, B10, B08 — AV A J L LA-C1F3 — B02 — D02 — BD N L L LA-C1F3 — B05

+ U REG 13 PWR — AC4 — XF191, XP101
XP101 + U REG 15 PWR — AA4
+ XIO SENSE RESET 15 — AM4 — XF151, XT301, XG111, XK111, XP201
XP101 + U REG 14 PWR — AB4
- XIO SENSE RESET 14 — AJ4
+ AREA 1 — AX4 — XC101, XW101, XC121, XK101, XK111
+ AREA 2 — AY4
+ AREA 3 — AZ4 — XT201, XT301
+ AREA 4 — BA4 — DU101, XF141, XF261, XF271
XG111 + AREA 5 — BB4
+ AREA 6 — BC4 — XP121, XP321, XP201, XP301, XP311
+ AREA 7 — BD4 — XC101, XC121

D U 1 1 1 004

SIM TD PN 5889199 EC 571150

AA4 A-C1G1A09 01A-B1F1B11
01A-B1G1A09 AY4 A-C1E1E11
AB4 A-C1F1E09 01A-B1E1E11
01A-B1F1E09 AZ4 A-C1F1A11
AC4 A-C1F1D09 01A-B1F1A11
01A-B1F1D09 BC4 A-C1F1E11
AJ4 A-C1E1A11 01A-B1F1E11
01A-B1E1A11
AM4 A-C1F1B11

LOC. TYPE
A-C1D3 0509
A-C1F2 0533
A-C1F3 4008
A-C1H3 3016

AREA DECODE AND SENSE RESET

E.C.-HISTORY

MACH.1131-C
FRAME 01
IBM CORP. GSD
P.N. 5889461

DATE LAST EC
03-14-72 571155

D U 1 1 1 004

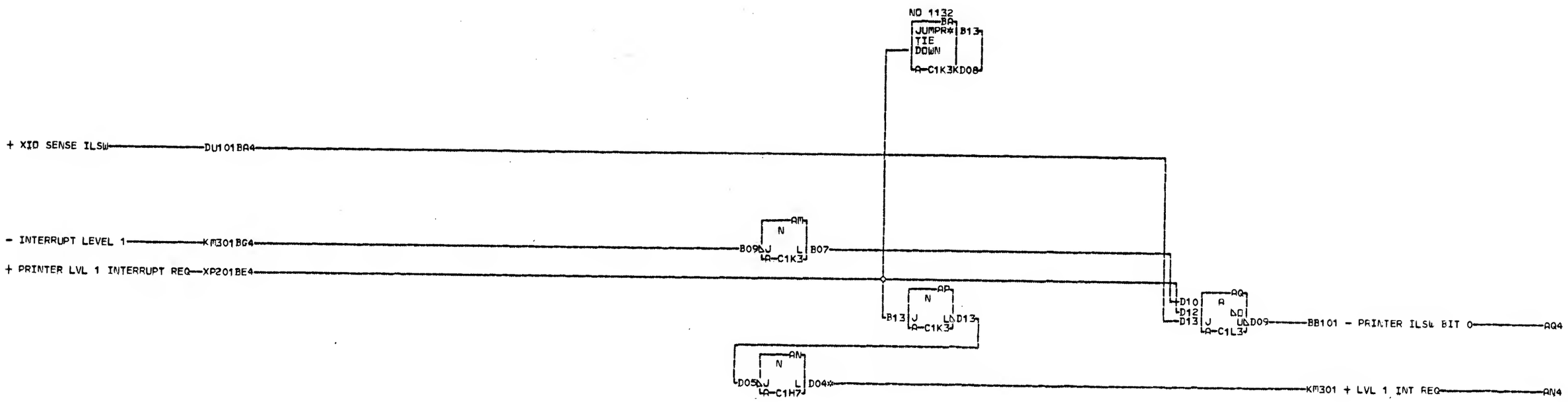

AN4 A-C1N4D11
01B-A1A6D11

LOC.	TYPE
A-C1H7	0000
A-C1K3	3421
A-C1L3	0238

U REGISTER POWERING

E.C. HISTORY

MACH. 1131-C

FRAME 01

IBM CORP. GSD

P.N. 5889200

DATE	LAST EC
02-09-71	571150

DU121 000

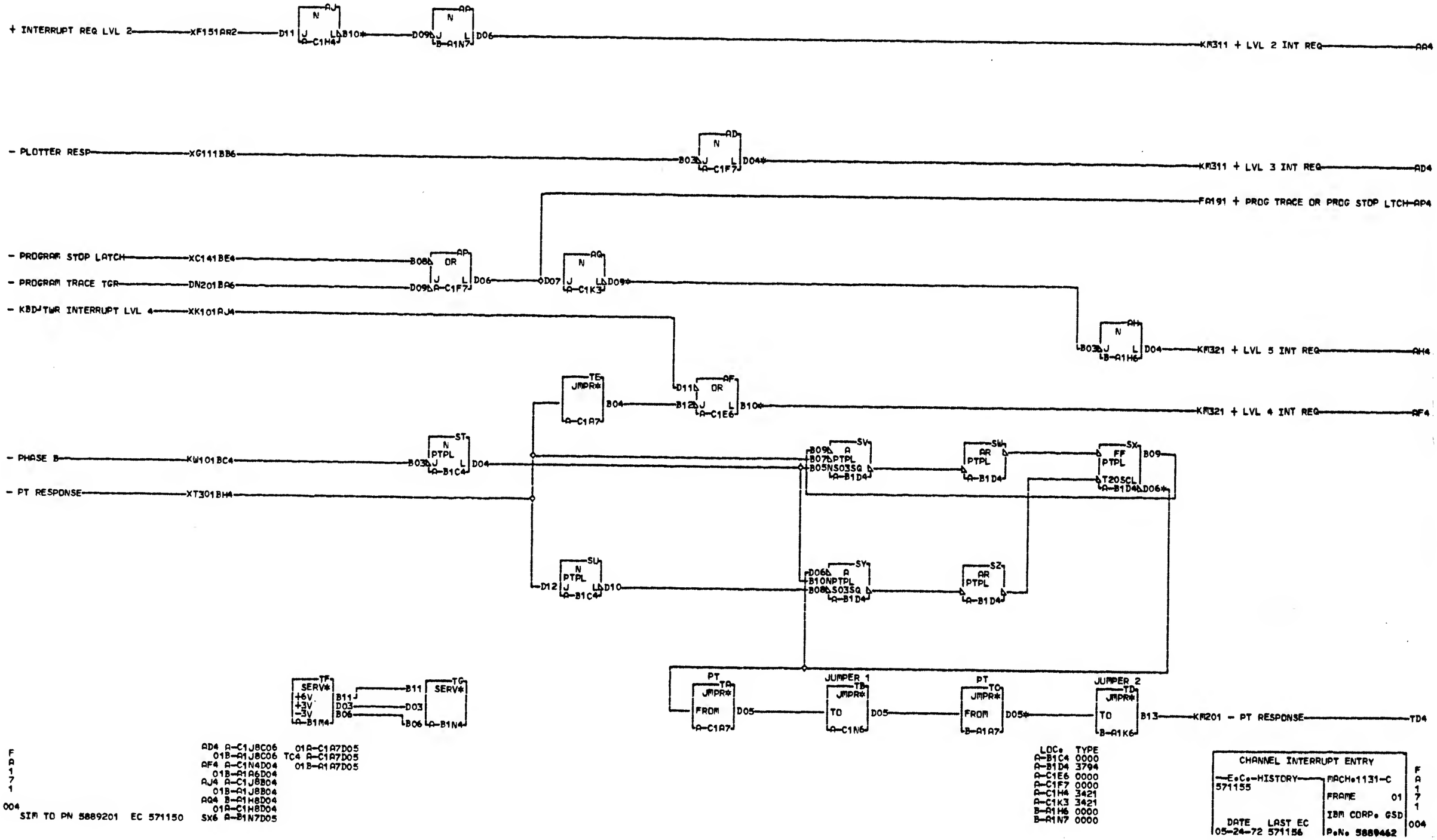

F A 1 7 1 004
SIM TO PN 5889201 EC 571150

AD4 A-C1J8C06
01B-A1J8C06
AF4 A-C1N4D04
01B-A1A6D04
AJ4 A-C1J8B04
01B-A1J8B04
AQ4 B-A1H8D04
01A-C1H8D04
SX6 A-B1N7D05
01A-C1A7D05
TC4 A-C1A7D05
01B-A1A7D05

LOC.	TYPE
A-B1C4	0000
A-B1D4	3794
A-C1E6	0000
A-C1F7	0000
A-C1H4	3421
A-C1K3	3421
B-A1H6	0000
B-A1N7	0000

CHANNEL INTERRUPT ENTRY
E.C.-HISTORY 571155
MACH.1131-C
FRAME 01
IBM CORP. GSD
P.N. 5889462
DATE LAST EC
05-24-72 571156

F A 1 7 1 004

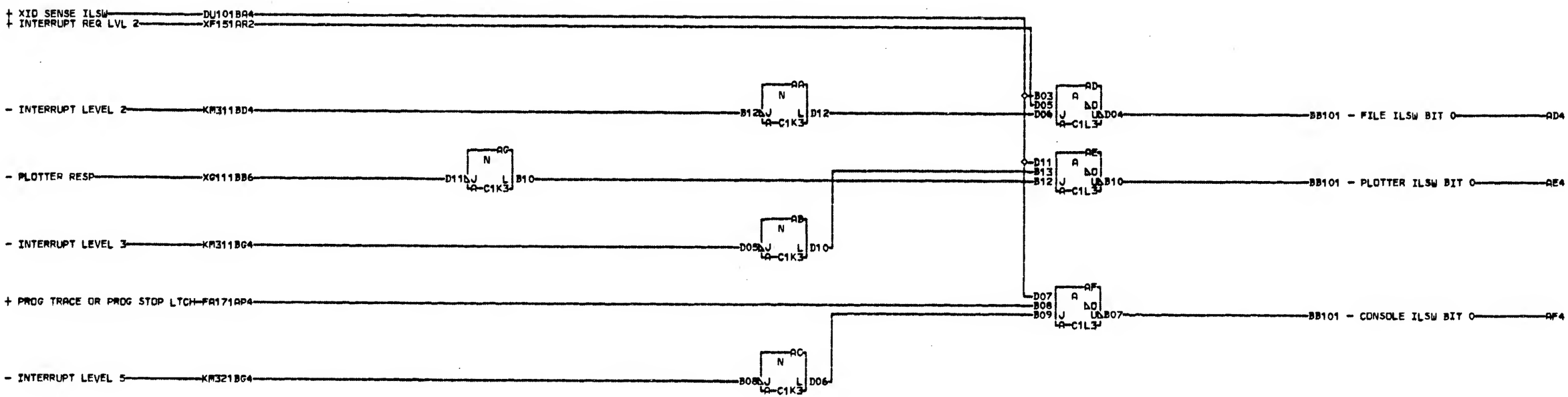

LOC. TYPE
A-C1K3 3421
A-C1L3 0238

CHANNEL ILSW ASSEMBLY		
—E.C.—HISTORY—	MACH.1131-C	FA191
	FRAME 01	
DATE LAST EC	IBM CORP. GSD	000
02-09-71 571150	P.No. 5889202	

FA191 000

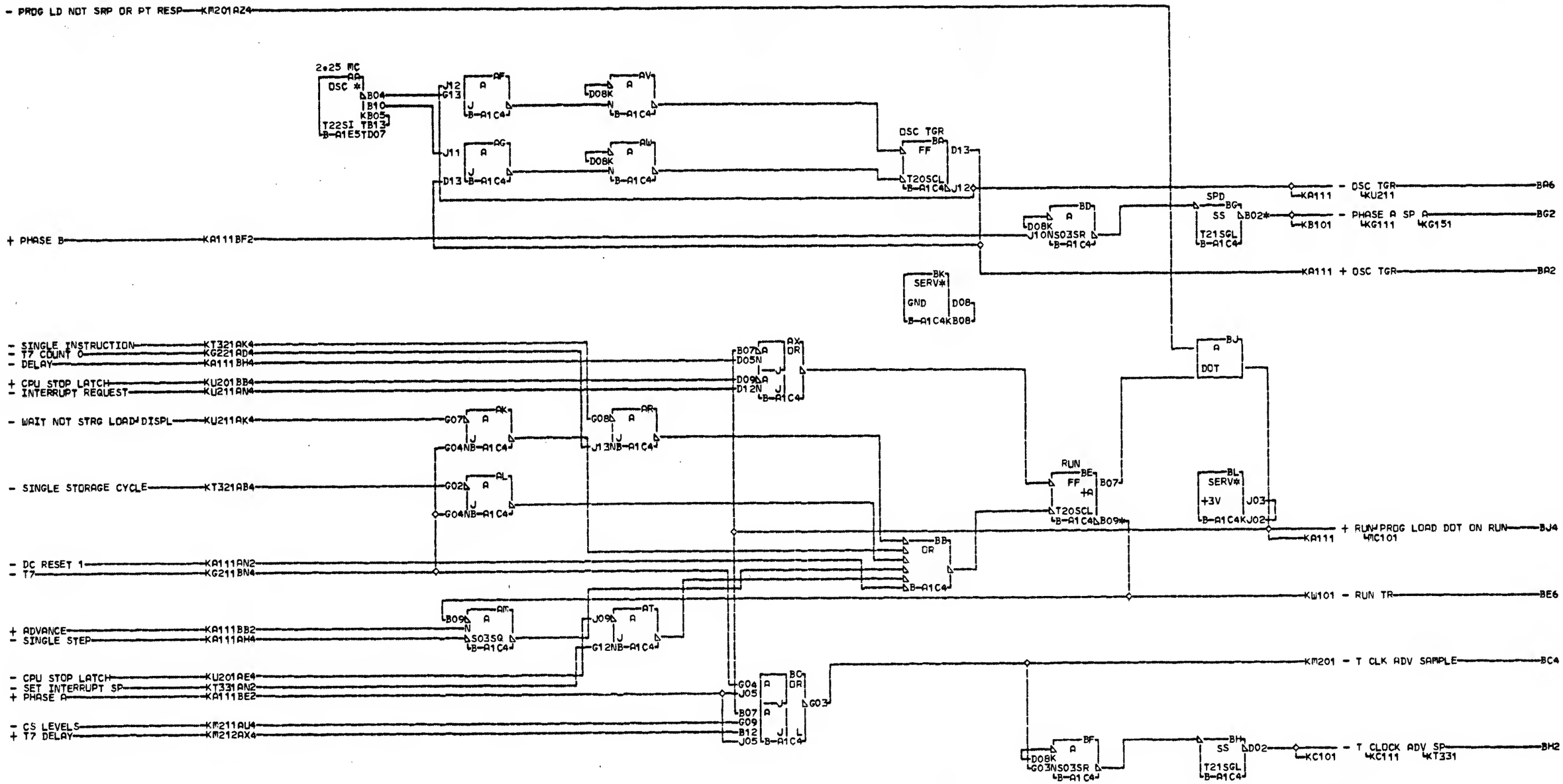

K A101 000

BE6 B-A1F8A06
01B-B1F8A06
BG2 B-A1M3D03
01B-B1A3D03

LOC. TYPE
B-A1C4 6213
B-A1E5 3765

OSCILLATOR PHASE A SPD RUN
T CLOCK ADVANCE
E.C.-HISTORY
571150
MACH.1131-C
FRAME 01
IBM CORP. GSD
DATE LAST EC
11-22-71 571154
P.No. 5889203

KA101 000

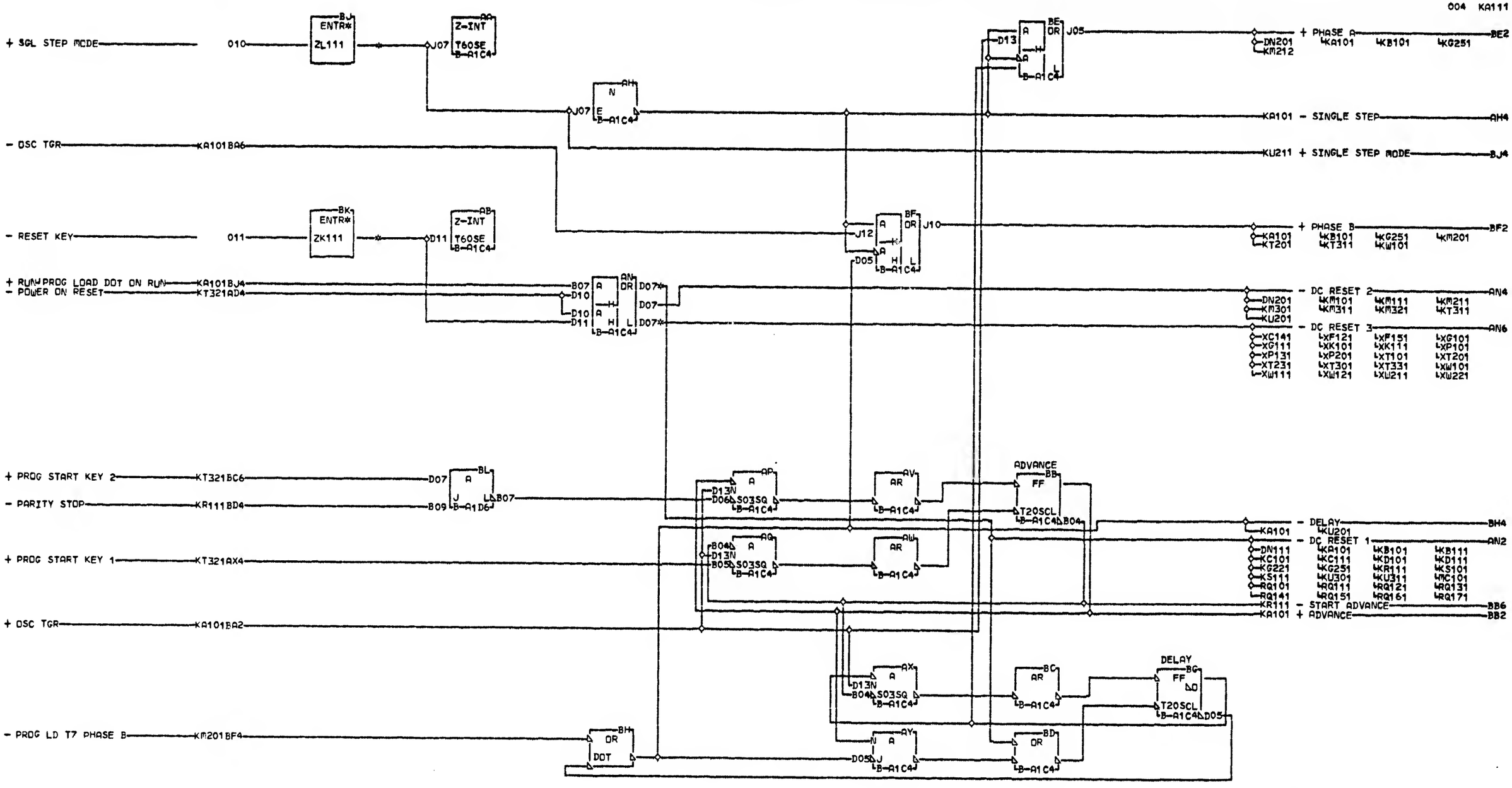

K
A
1
1
1
004
SIM TO PN 5889204 EC 571150

AN2 B-A1N4B07
01B-B1A4B07
AN6 B-A1A6B10
01A-C1N4B10
01A-C1A7B10
01A-B1N7B10
BJ4 B-A1A5D13
BK4 B-A1A5D10

LOC. TYPE
B-A1C4 6213
B-A1D6 0000

PHASE A AND B RESET
DELAY START ADVANCE
—E.C.—HISTORY— MACH.1131-C
FRAME 01
IBM CORP. GSD
DATE LAST EC
03-14-72 571155
P.N. 5889463

K
A
1
1
1
004

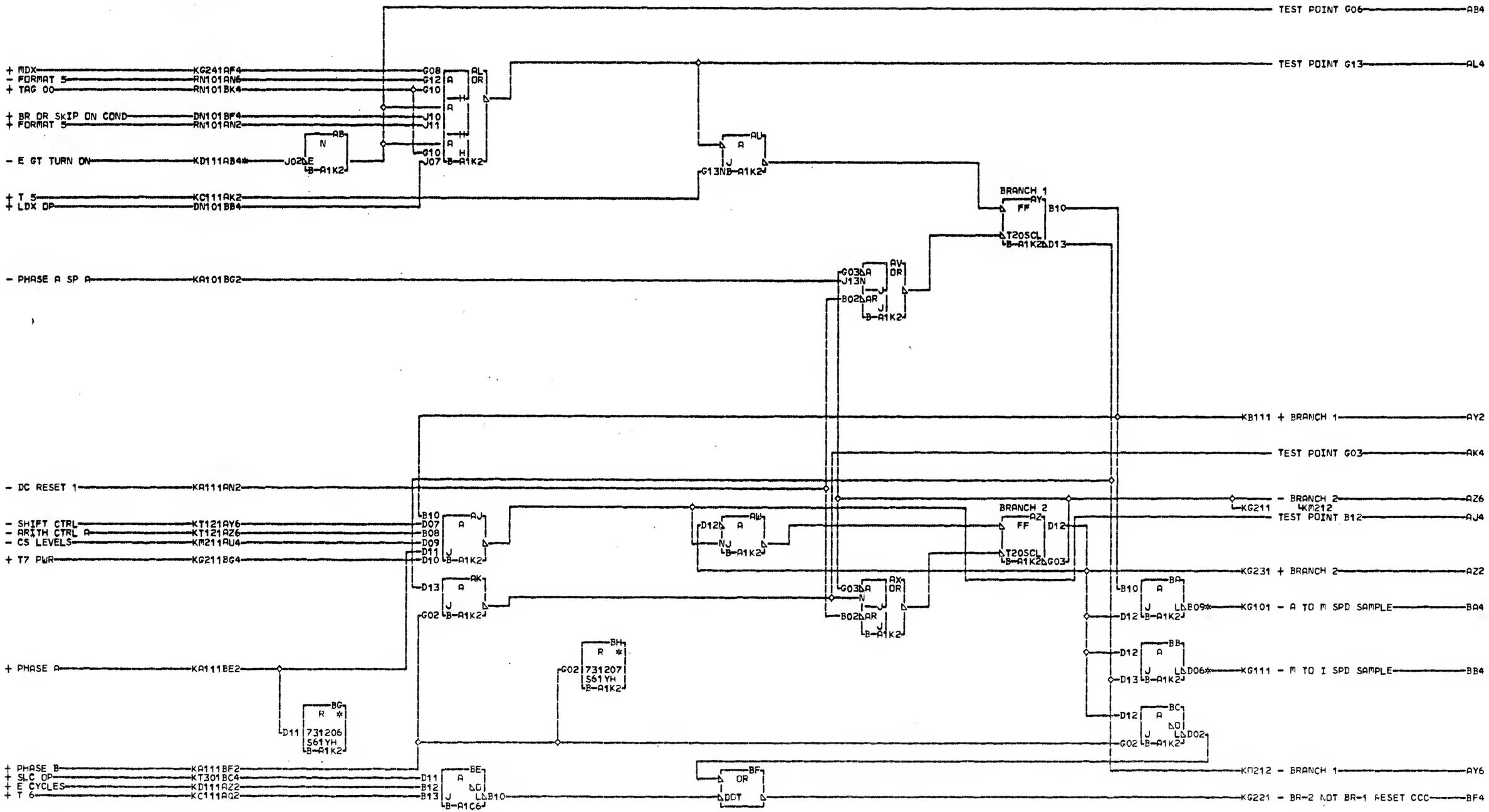

KD111AB4
RESISTOR
B-A1K2J02
BA4 B-A1N2B08
01B-B1A2B08
BB4 B-A1N2B07
01B-B1A2B07

LOC. TYPE
B-A1C6 0000
B-A1K2 7312

BR-1 BR-2 A TO M SAMPLE
M TO I SAMPLE
E.C.-HISTORY MACH.1131-C
FRAME 01
IBM CORP. GSD
DATE LAST EC
02-10-71 571150
P.N. 5889205

KB101
000

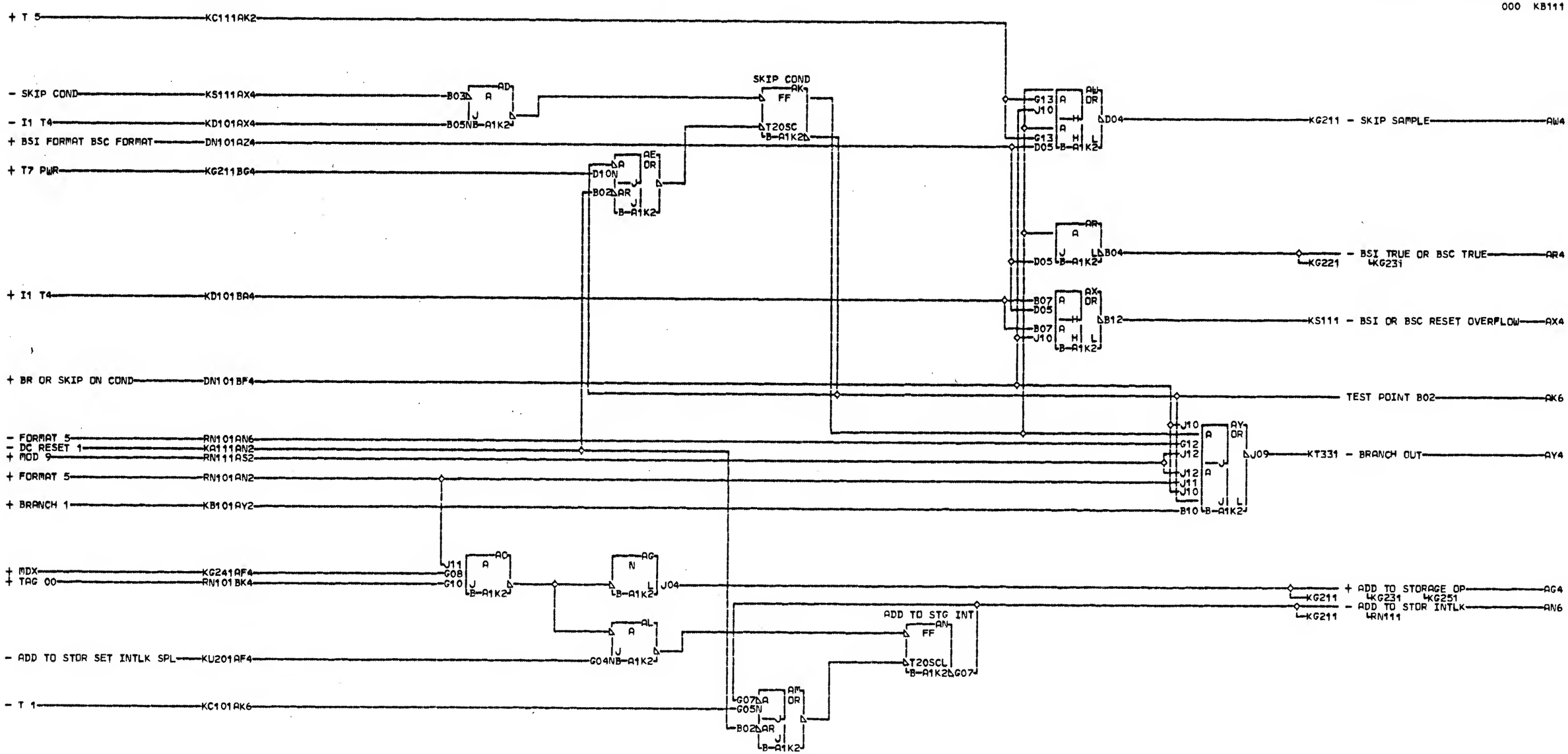

K
B
1
1
1

000

LOC. TYPE
B-A1K2 7312

SKIP SAMPLE BRANCH OUT
ADD TO STOR INTLK
—E.C.-HISTORY— MACH.1131-C
FRAME 01
IBM CORP. GPD
DATE LAST EC
02-09-71 571150
P.N. 5889206

K
B
1
1
1

000

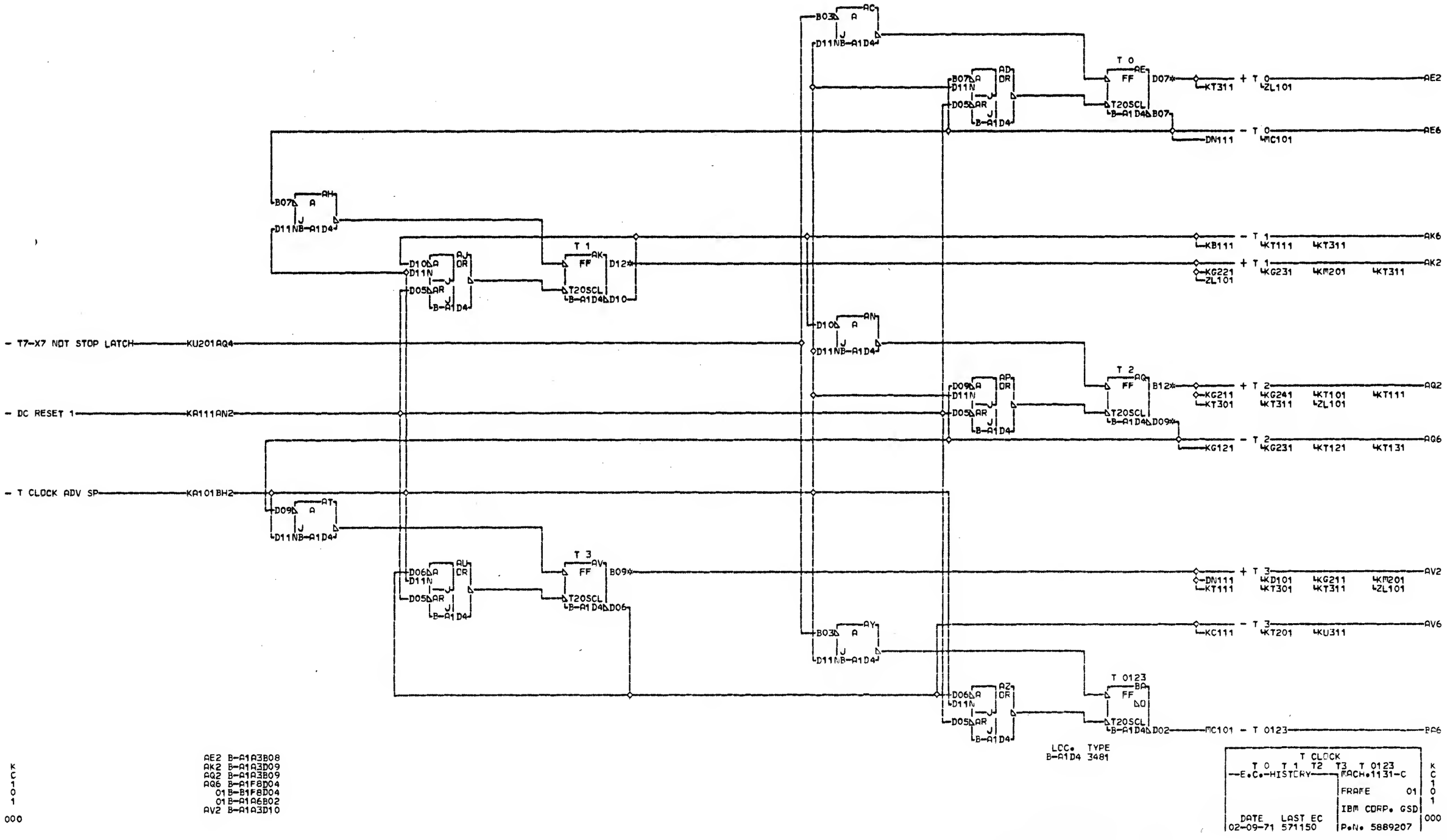
- T7-X7 NOT STOP LATCH
KU201AQ4
- DC RESET 1
KA111AN2
- T CLOCK ADV SP
KA101BH2
B03 A AC D11NB-A1D4
B07 A AH D11NB-A1D4
D10 A AJ D11N OR D05 AR B-A1D4
T 1 AK FF D12* T20SCL B-A1D4 D10
D10 A AN D11NB-A1D4
D09 A AT D11NB-A1D4
D06 A AU D11N OR D05 AR B-A1D4
T 3 AV FF B09* T20SCL B-A1D4 D06
B03 A AY D11NB-A1D4
B07 A AD D11N OR D05 AR B-A1D4
T 0 AE FF D07* T20SCL B-A1D4 B07
D09 A AP D11N OR D05 AR B-A1D4
T 2 AQ FF B12* T20SCL B-A1D4 D09*
D06 A AZ D11N OR D05 AR B-A1D4
T 0123 BA FF D0 T20SCL B-A1D4 D02
+ T 0 ZL101 AE2
- T 0 MC101 AE6
DN111
KT311
- T 1 KB111 4KT111 4KT311 AK6
+ T 1 KG221 ZL101 4KG231 4KM201 4KT311 AK2
+ T 2 KG211 KT301 4KG241 4KT101 4KT111 4KT311 4ZL101 AQ2
- T 2 KG121 4KG231 4KT121 4KT131 AQ6
+ T 3 DN111 KT111 4KD101 4KG211 4KM201 4KT301 4KT311 4ZL101 AV2
- T 3 KC111 4KT201 4KU311 AV6
MC101 - T 0123 BA6
LOC. TYPE
B-A1D4 3481
T CLOCK
T 0 T 1 T2 T3 T 0123
E.C. HISTORY
MACH.1131-C
FRAME 01
IBM CORP. GSD
DATE LAST EC
02-09-71 571150
P.N. 5889207
K C 1 0 1 000
AE2 B-A1A3B08
AK2 B-A1A3D09
AQ2 B-A1A3B09
AQ6 B-A1F8D04
01B-B1F8D04
01B-A1A6B02
AV2 B-A1A3D10

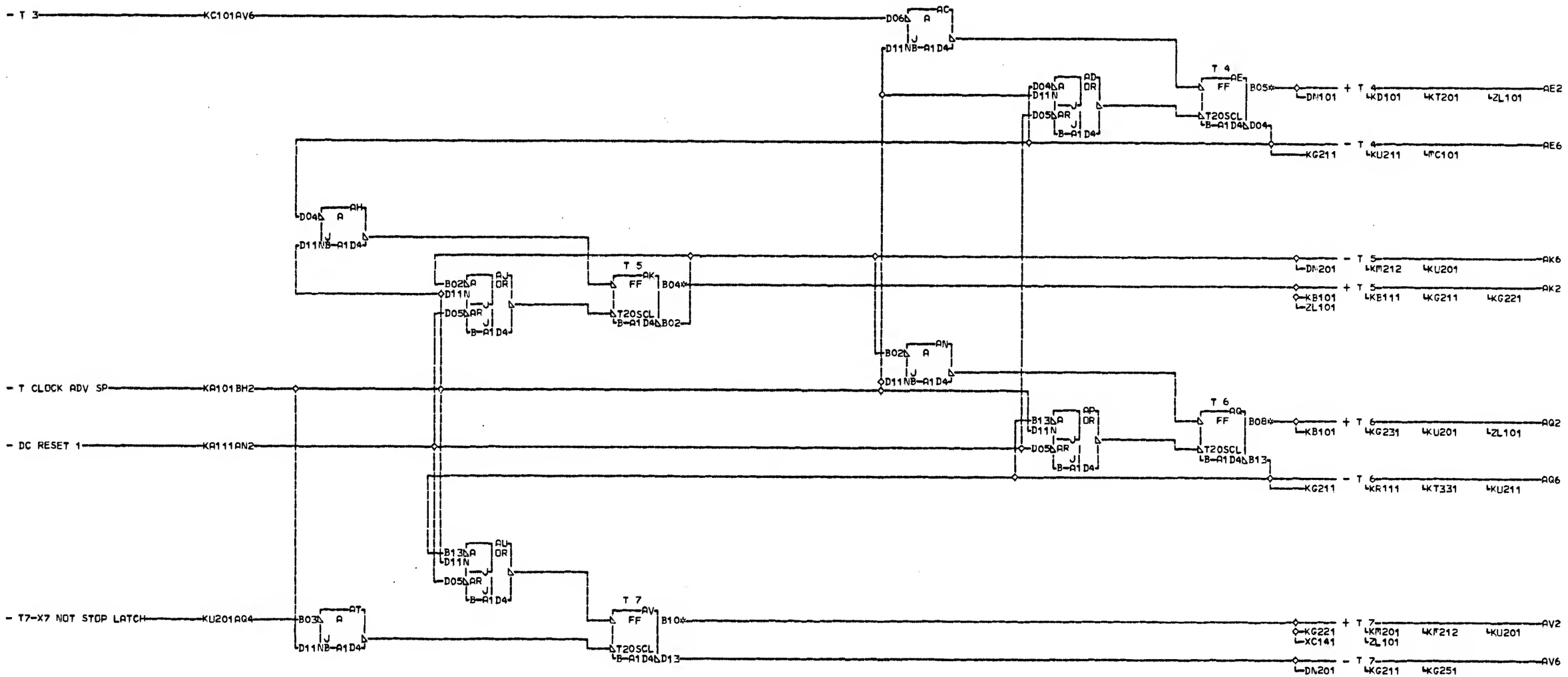

K
C
1
1
1
000

AE2 B-A1A3B10
AK2 B-A1A3D11
AQ2 B-A1A3B12
AV2 B-A1A3D12

LOC. TYPE
B-A1D4 3481

T CLOCK
T 4 T 5 T 6 T 7
E.C.-HISTORY
571150
MACH.1131-C
FRAME 01
IBM CORP. GSD
DATE LAST EC
11-22-71 571154
P.N. 5889208

K
C
1
1
1
000

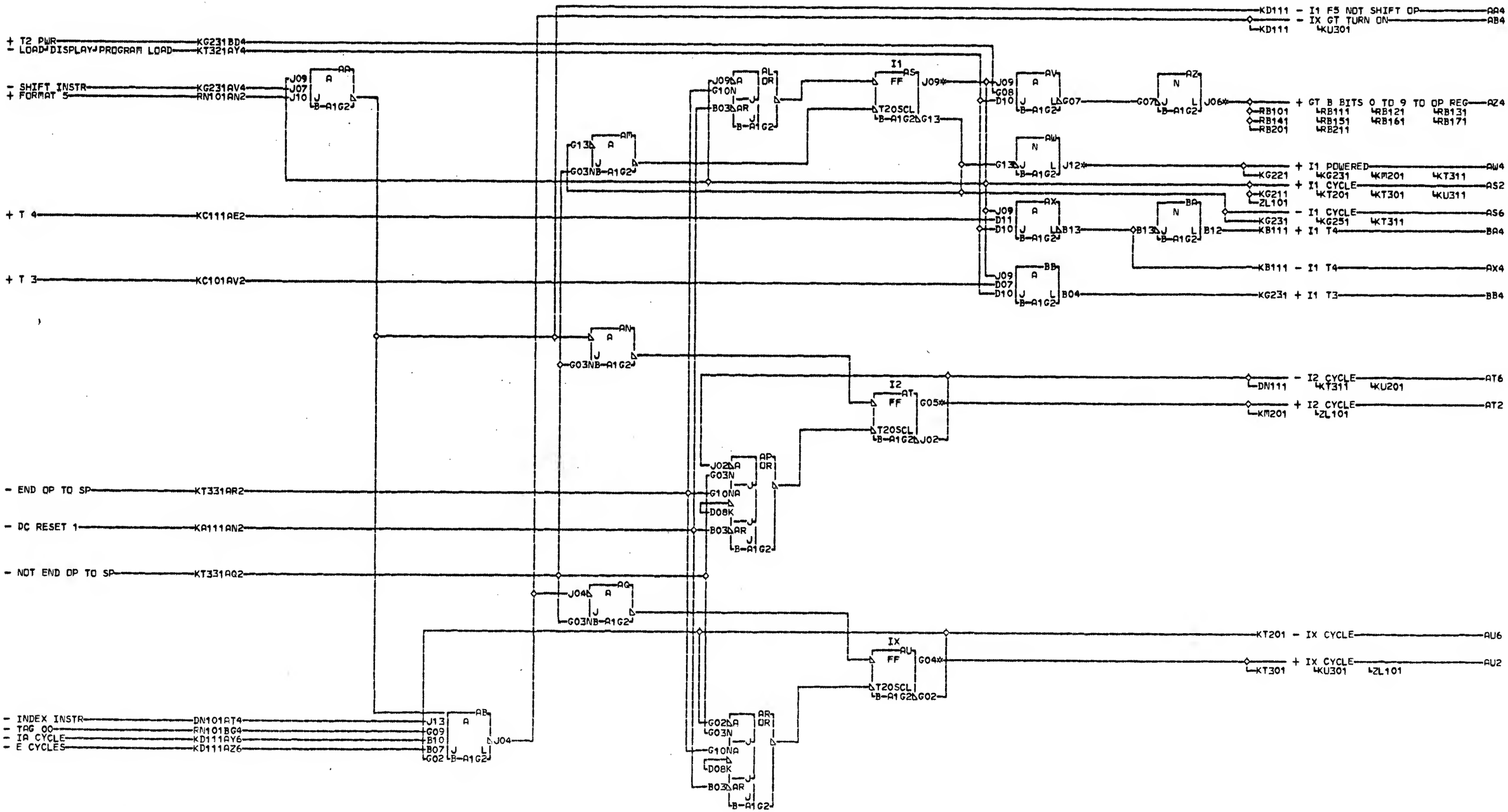

K D101 000

AS2 B-A1A3B02
AT2 B-A1A3B03
01B-A1L8B04
01B-B1L8B04
AU2 B-A1A3B05
AW4 B-A1K8E04
01B-B1K8E04
AZ4 B-A1N3B10
01B-B1A3B10

LOC. TYPE
B-A1G2 4672

CYCLE TIMER
I1 I2 IX
E.C.-HISTORY
MACH.1131-C
FRAME 01
IBM CORP. GSD
DATE LAST EC
02-09-71 571150
P.N. 5889209

K D101 000

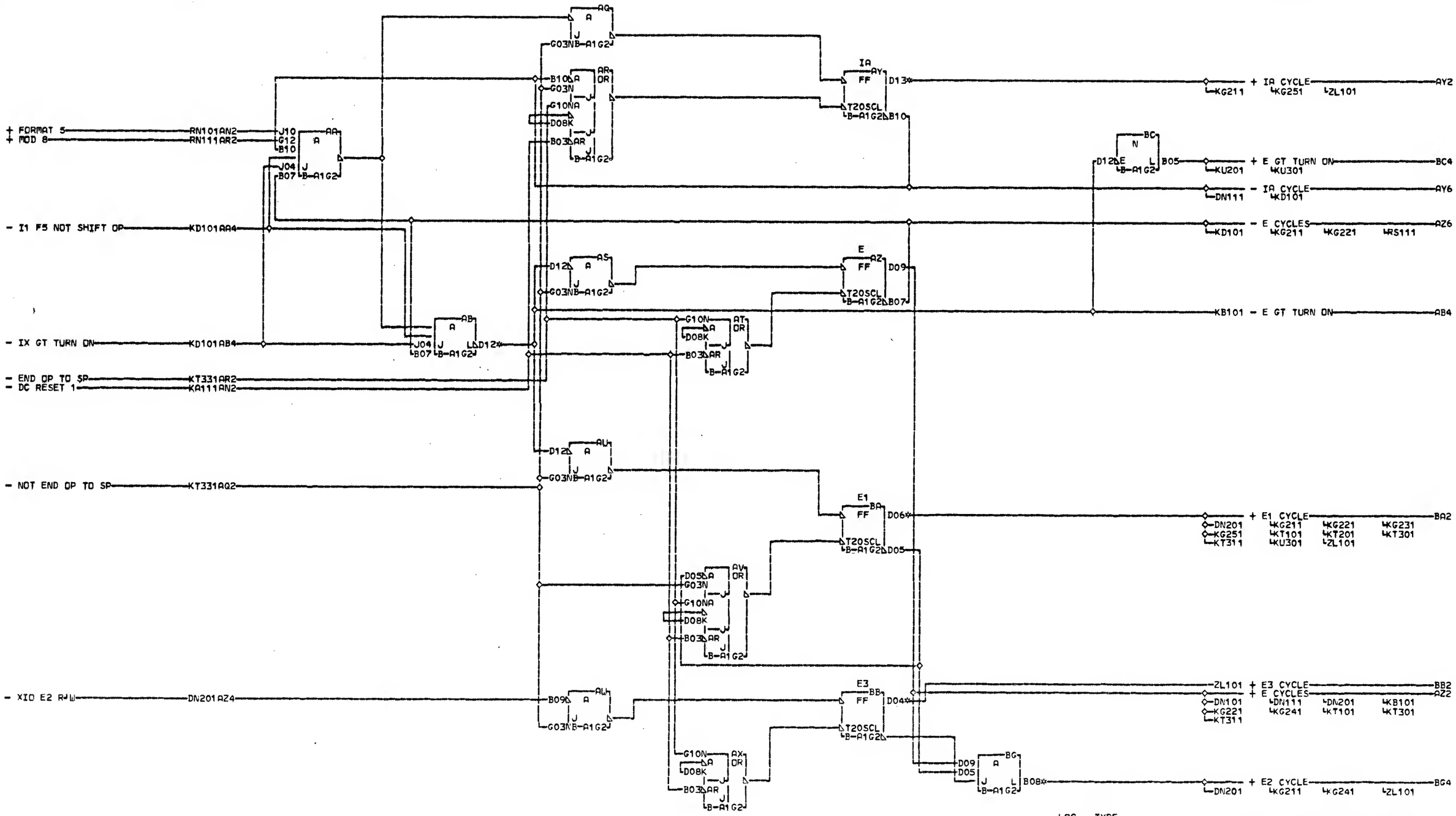

AB4 RESISTOR B-A1G2D12

K	AY2	B-A1A3B04
D	BA2	B-A1A3D02
1	BB2	B-A1A3D05
1	BG4	B-A1A3D04
1		

000

LOC. TYPE
B-A1G2 4672

CYCLE TIMER
IA E E1 E3
-E.C.-HISTORY- MACH.1131-C
FRAME 01
IBM CORP. GSD
DATE LAST EC
02-09-71 571150
P.N. 5889210

K D 1 1 1 000

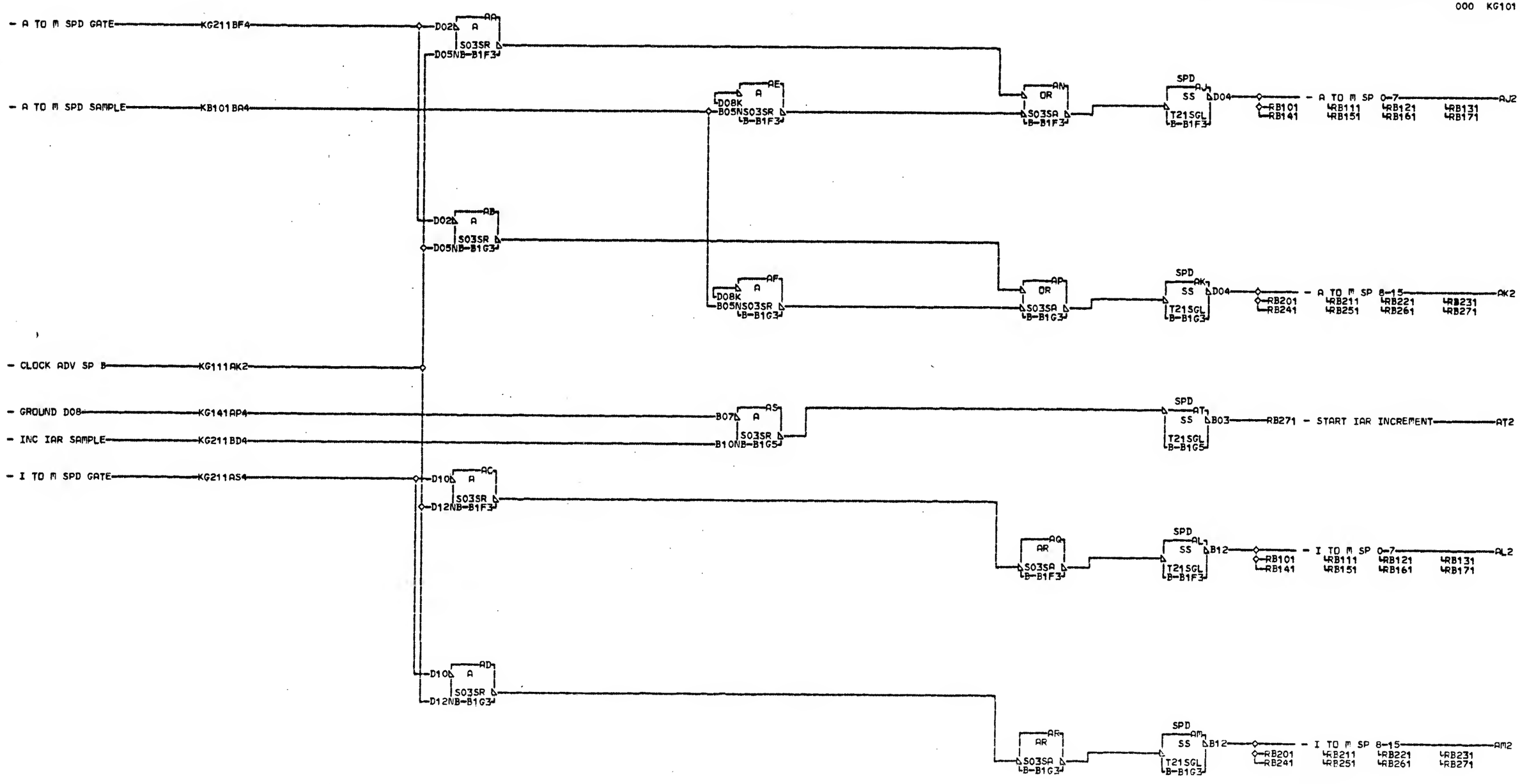

LOC. TYPE
B-B1F3 3757
B-B1G3 3757
B-B1G5 3757

A TO M AND I TO M
SAMPLE PULSE DRIVERS

E.C.-HISTORY | EACH.1131-C

DATE	LAST EC
02-09-71	571150

FRAME 01
IBM CORP. GPD
P.No. 5889211

KG101 000

KG101 000

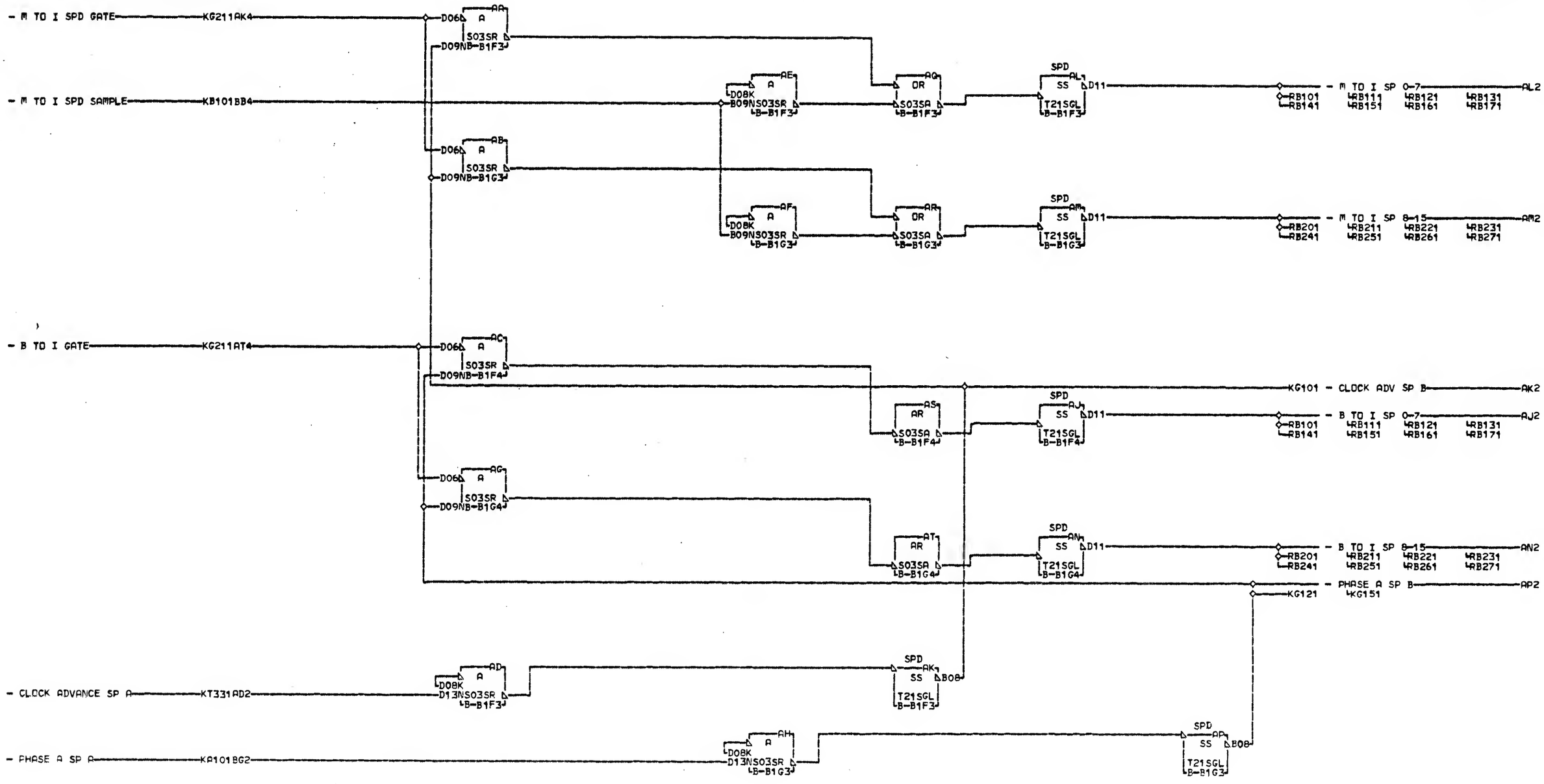

LOC. TYPE
B-B1F3 3757
B-B1F4 3757
B-B1G3 3757
B-B1G4 3757

CLK ADV M TO I B TO I PH A SAMPLE PULSE DRIVERS
E.C. HISTORY
MACH. 1131-C
FRAME 01
IBM CORP. GPD
DATE LAST EC
02-09-71 571150
P.N. 5889212

K G 1 1 1 000

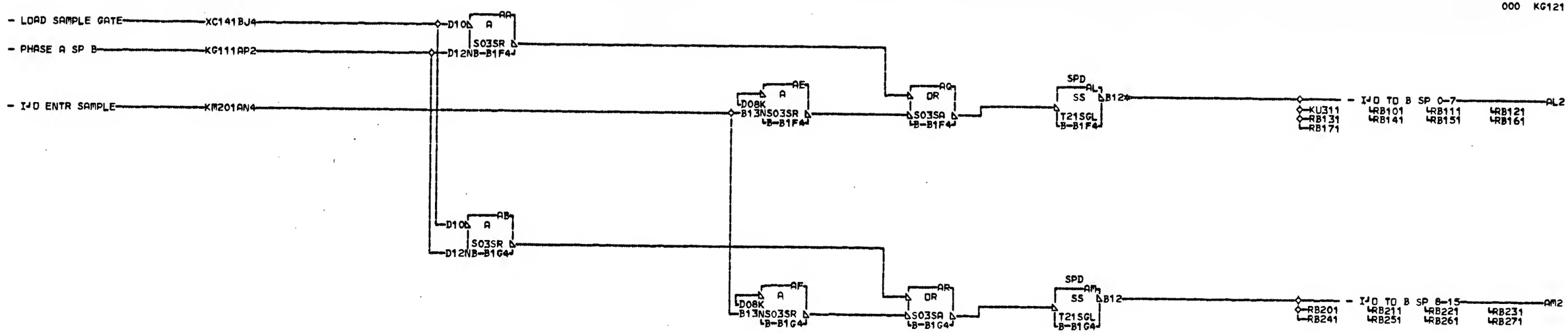

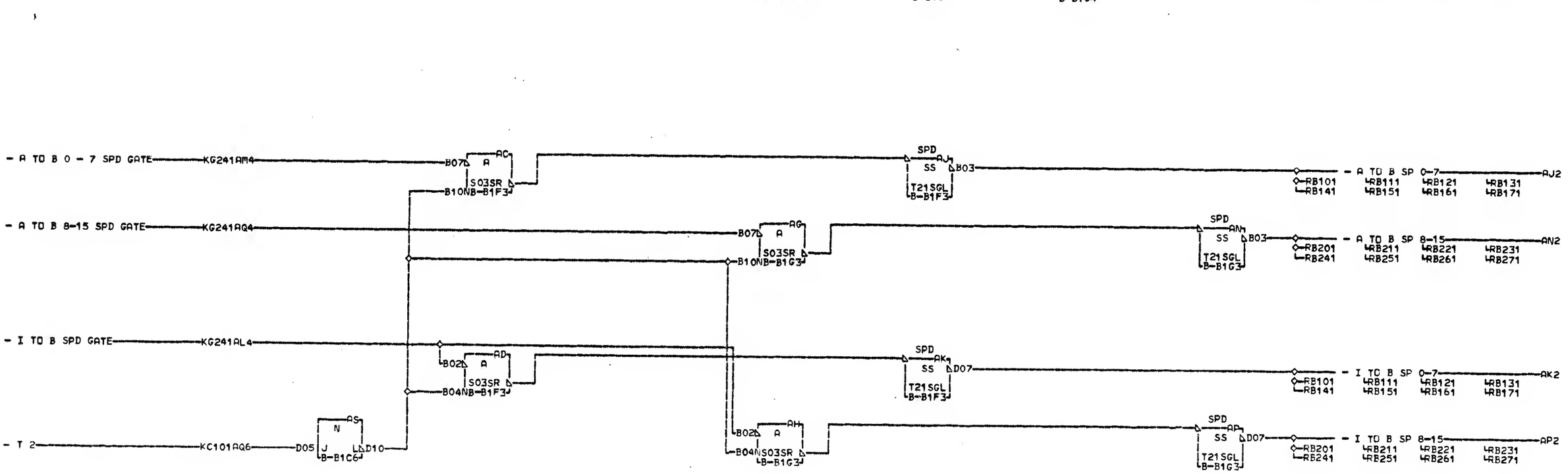

K G 1 2 1 000

AL2 B-B1A4B09
01B-A1N4B09

LOC.	TYPE
B-B1C6	3686
B-B1F3	3757
B-B1F4	3757
B-B1G3	3757
B-B1G4	3757

I/O TO B A TO B I TO B SAMPLE PULSE DRIVERS
—E.C.—HISTORY— MACH.1131-C
FRAME 01
IBM CORP. GPD
DATE LAST EC
02-09-71 571150
P.N. 5889213

K G 1 2 1 000

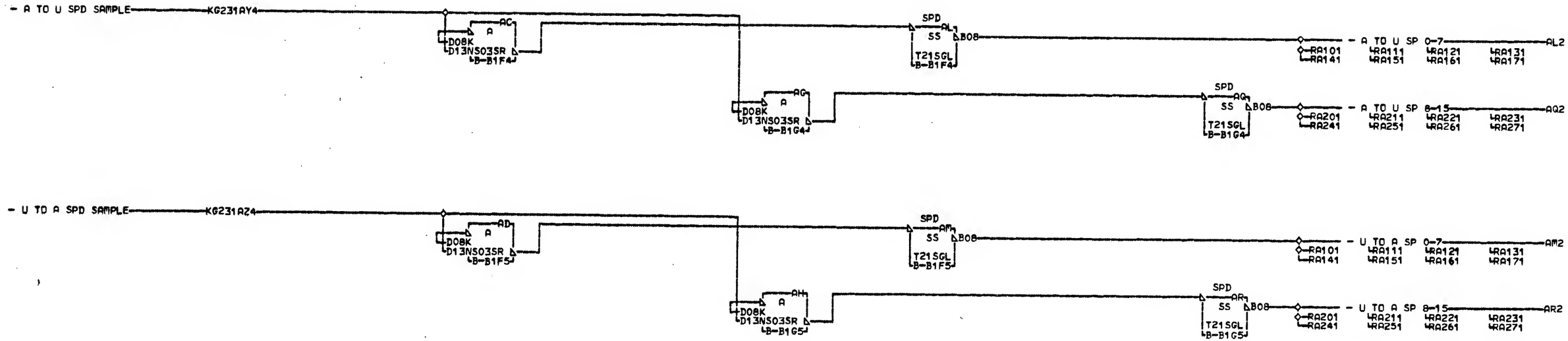

K
G
1
3
1

000

LOC.	TYPE
B-B1F4	3757
B-B1F5	3757
B-B1G4	3757
B-B1G5	3757

A TO U U TO A XCHG A AND Q SAMPLE PULSE DRIVERS

E.C.-HISTORY — MACH.1131-C

FRAME 01

IBM CORP. GPD

DATE LAST EC

02-09-71 571150

P.N. 5889214

K G 1 3 1 000

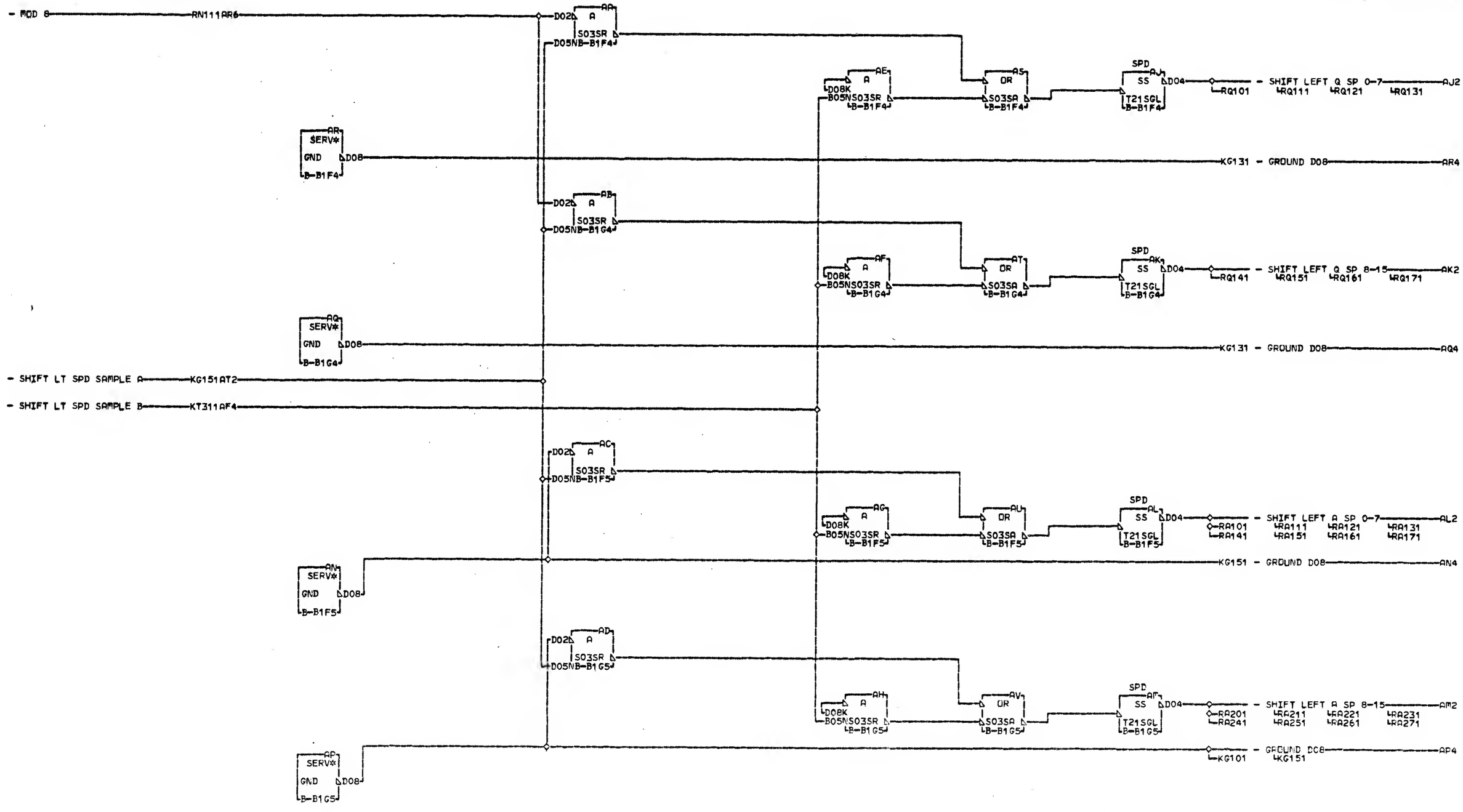

LOC.	TYPE
B-B1F4	3757
B-B1F5	3757
B-B1G4	3757
B-B1G5	3757

SHIFT LEFT A-Q
SAMPLE PULSE DRIVERS

E.C. HISTORY | MACH. 1131-C | FRAME 01 | IBM CORP. GPD

DATE	LAST EC
02-09-71	571150

P.N. 5889215

KG141 000

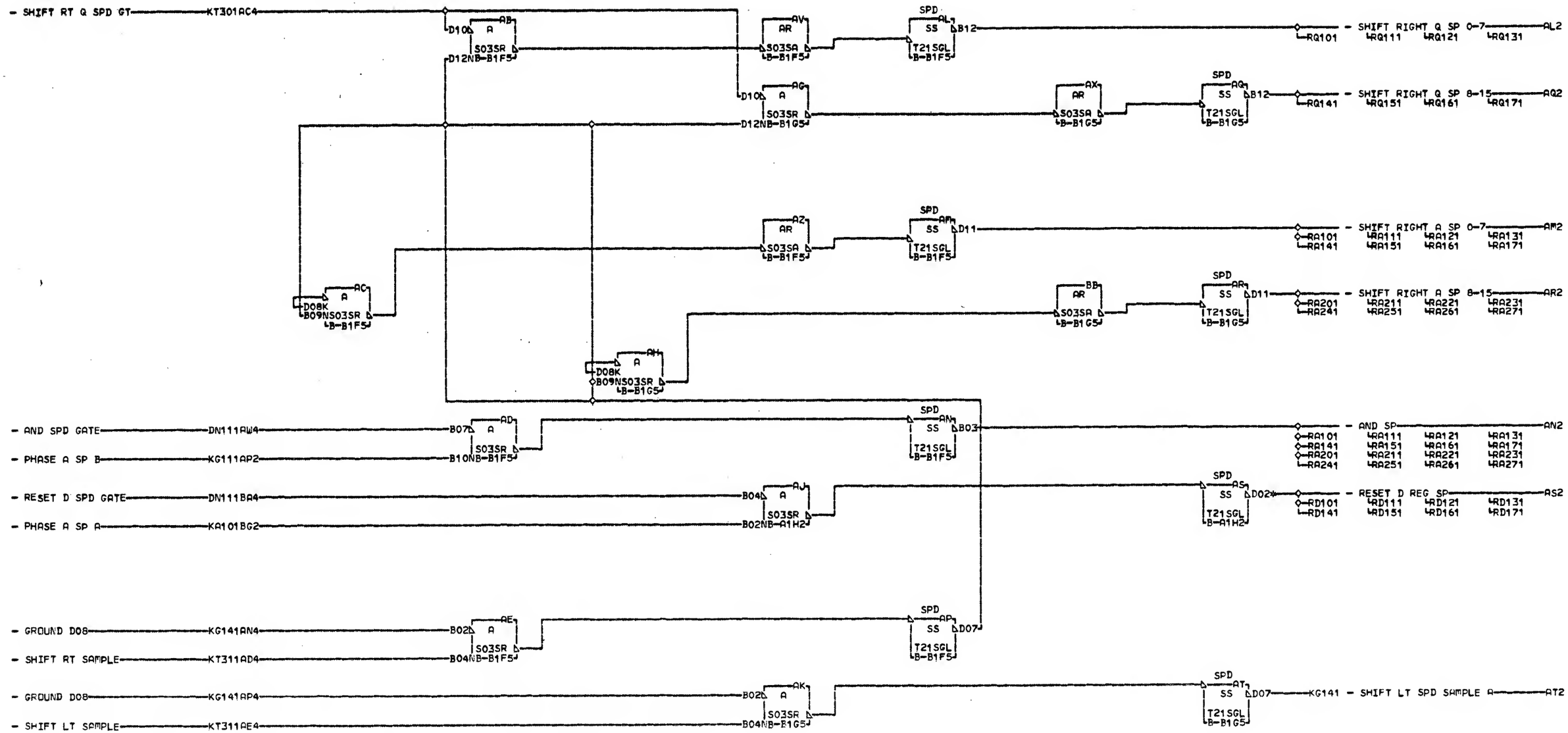

AS2 B-B1A3D04
01B-A1N3D04

LOC.	TYPE
B-A1H2	6207
B-B1F5	3757
B-B1G5	3757

SHIFT RIGHT A/Q RESET D AND SAMPLE PULSE DRIVERS

—E.C.—HISTORY— MACH.1131-C

FRAME 01

IBM CORP. GPD

DATE	LAST EC
02-09-71	571150

P.N. 5889216

KG151 000 KG151 000

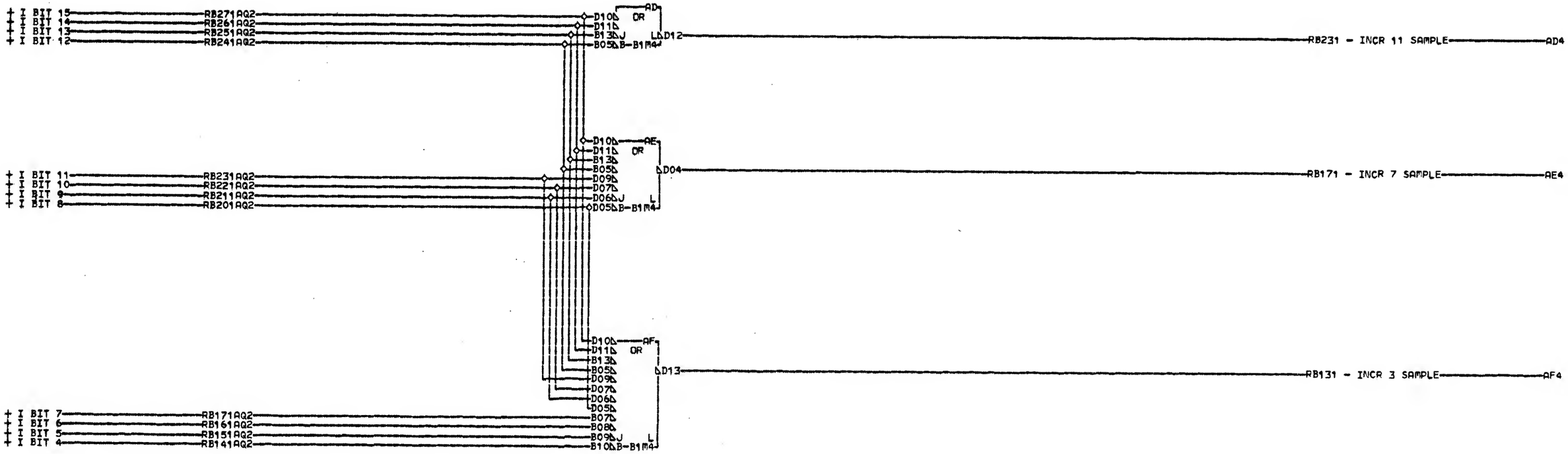

LOC. TYPE
B-B1M4 3807

I INCREMENTER

—E.C.—HISTORY— MACH.1131-C

FRAME 01

IBM CORP. GPD

DATE LAST EC
02-09-71 571150

P.N. 5869217

KG201 000

KG201 000

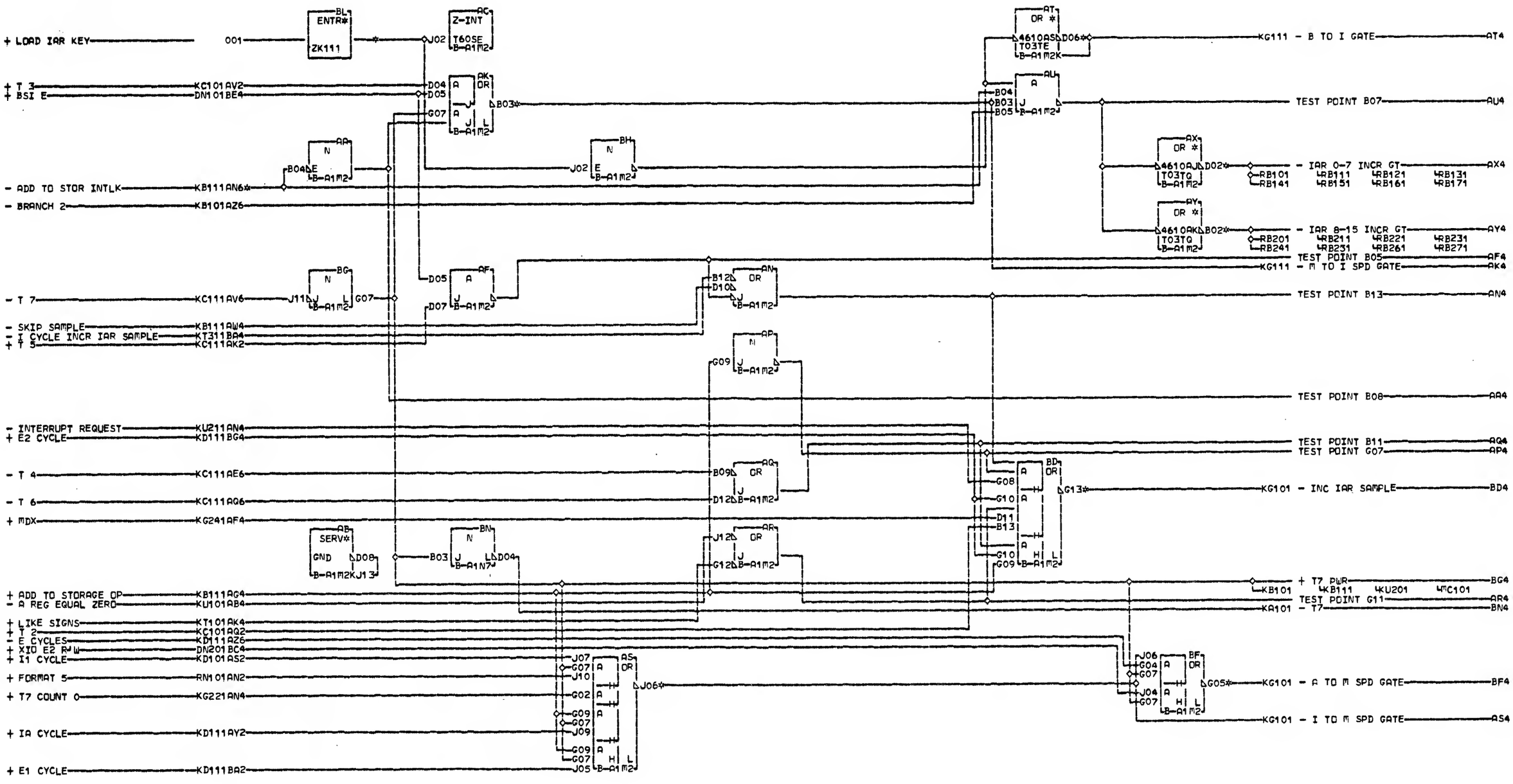

K G 2 1 1 000

KB111AN6 RESISTOR B-A1M2B04
AK4 B-A1N2D02 01 B-B1A2D02
AS4 B-A1N3D09 01 B-B1A3D09 RESISTOR B-A1M2J06
AT4 B-A1N2D06 01 B-B1A2D06
AX4 B-A1N2B03 01 B-B1A2B03 RESISTOR B-A1M2B13
AY4 B-A1N2D03 01 B-B1A2D03
BD4 B-A1N2D07 01 B-B1A2D07 RESISTOR B-A1M2J06
BF4 B-A1N3D02 01 B-B1A3D02 RESISTOR B-A1M2G05
BL4 B-A1A5D02

LOC. TYPE
B-A1M2 4610
B-A1N7 0000

B TO I + M TO I AND I INC GATE
I TO M AND A TO M GATE
—E.C.—HISTORY— MACH.1131-C
571150
FRAME 01
IBM CORP. GSD
DATE LAST EC
11-22-71 571154
P.N. 5889218

K G 2 1 1 000

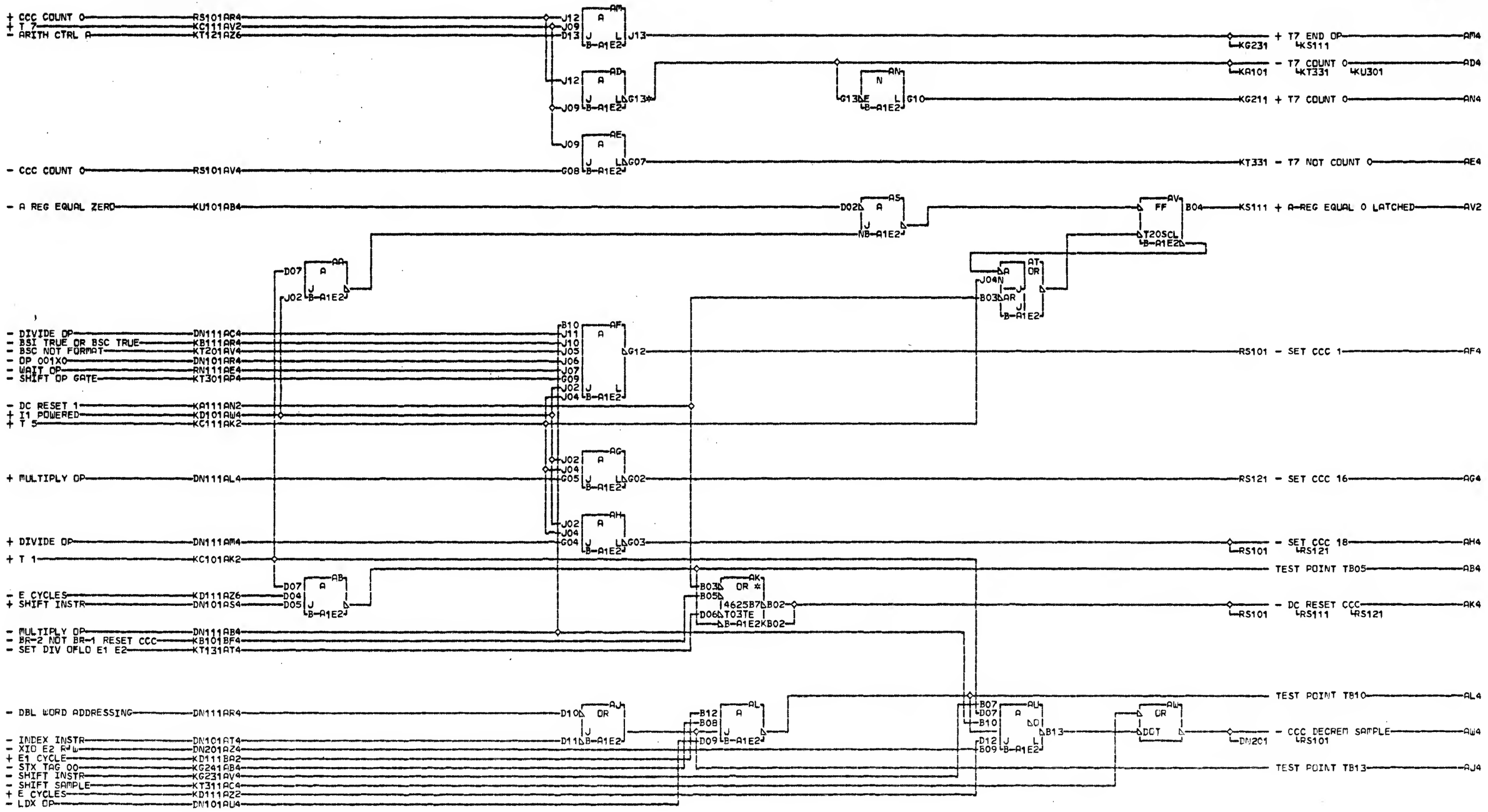
+ CCC COUNT 0 RS101AR4
+ T 7 KC111AV2
- ARITH CTRL A KT121AZ6
+ T7 END OP KS111 AM4
- T7 COUNT 0 KT331 KU301 AD4
+ T7 COUNT 0 AN4
- CCC COUNT 0 RS101AV4
KT331 - T7 NOT COUNT 0 AE4
- A REG EQUAL ZERO KU101AB4
KS111 + A-REG EQUAL 0 LATCHED AV2
- DIVIDE OP DN111AC4
- BSI TRUE OR BSC TRUE KB111AR4
- BSC NOT FORMAT KT201AV4
- OP 001XO DN101AR4
- WAIT OP RN111AE4
- SHIFT OP GATE KT301AP4
RS101 - SET CCC 1 AF4
- DC RESET 1 KA111AN2
+ I1 POWERED KD101AW4
+ T 5 KC111AK2
+ MULTIPLY OP DN111AL4
RS121 - SET CCC 16 AG4
+ DIVIDE OP DN111AM4
RS101 - SET CCC 18 RS121 AH4
+ T 1 KC101AK2
TEST POINT TB05 AB4
- E CYCLES KD111AZ6
+ SHIFT INSTR DN101AS4
RS101 - DC RESET CCC RS111 RS121 AK4
- MULTIPLY OP DN111AB4
- BR-2 NOT BR-1 RESET CCC KB101BF4
- SET DIV OFLO E1 E2 KT131AT4
TEST POINT TB10 AL4
- DBL WORD ADDRESSING DN111AR4
- INDEX INSTR DN101AT4
- XIO E2 RW DN201AZ4
+ E1 CYCLE KD111BA2
- STX TAG 00 KG241AB4
- SHIFT INSTR KG231AV4
- SHIFT SAMPLE KT311AC4
+ E CYCLES KD111AZ2
- LDX OP DN101AU4
- CCC DECREM SAMPLE RS101 DN201 AW4
TEST POINT TB13 AJ4
AD4 RESISTOR
B-A1E2G13
LOC. TYPE
B-A1E2 4625
T7 END OP T7 COUNT 0
CCC CONTROLS
E.C. HISTORY
MACH.1131-C
FRAME 01
IBM CORP. GPD
DATE LAST EC
02-09-71 571150
P.N. 5889219
KG221
000

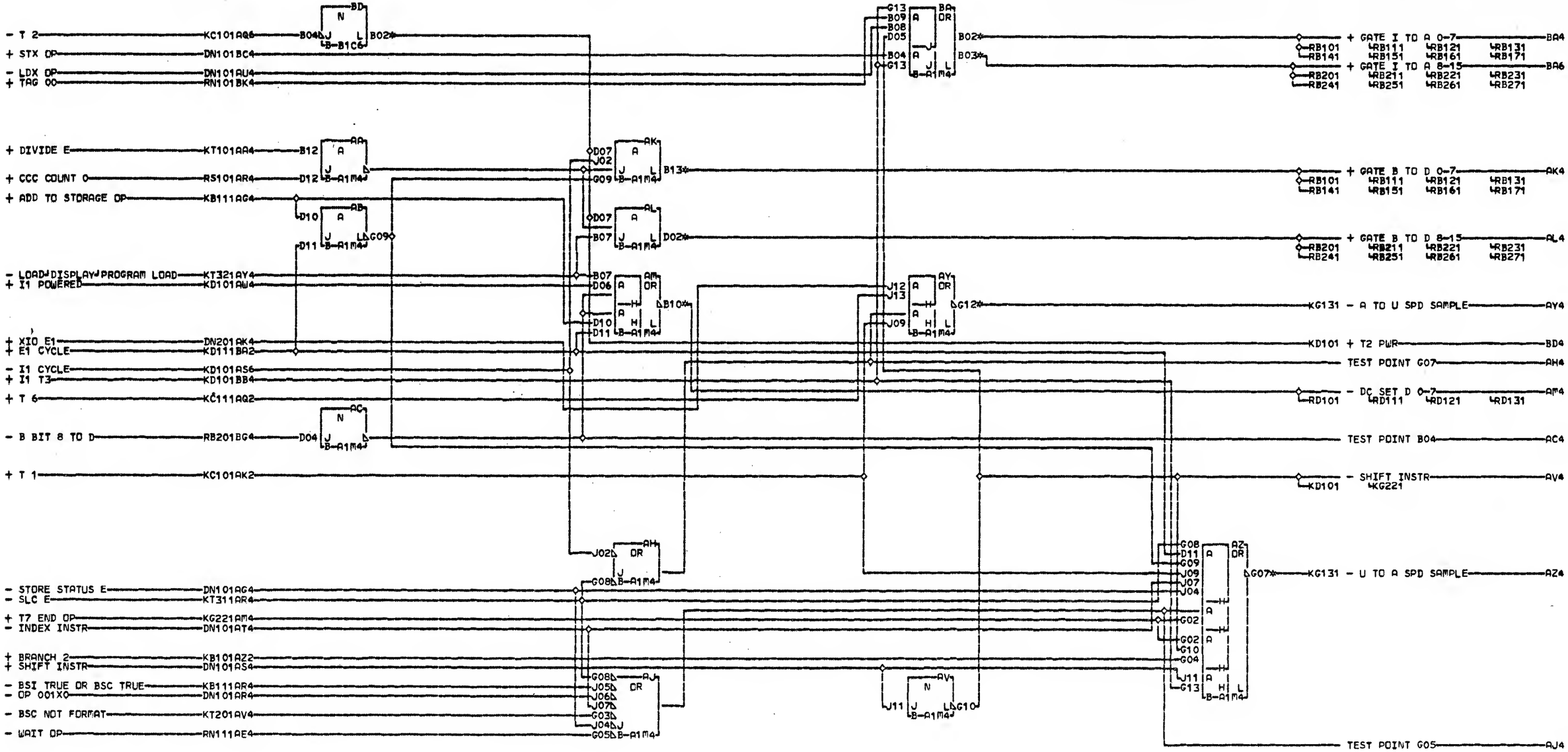

AK4	B-A1N3B05	01B-B1A5B07
	01B-B1A3B05	BA4 B-A1N2B04
AL4	B-A1N3D05	01B-B1A2B04
	01B-B1A3D05	BA6 B-A1N2D04
AM4	B-A1N4D07	01B-B1A2D04
	01B-B1A4D07	BD4 B-A1F8C04
AY4	B-A1N5D02	01B-B1F8C04
	01B-B1A5D02	
AZ4	B-A1N5B07	

LOC.	TYPE
B-A1M4	4621
B-B1C6	3686

I TC A AND B TO D GATE
A TO U AND U TO A SAMPLE
E.C. HISTORY — MACH.1131-C
FRAME 01
IBM CORP. GSD
DATE LAST EC
02-09-71 571150
P.N. 5889220

K G 2 3 1 000

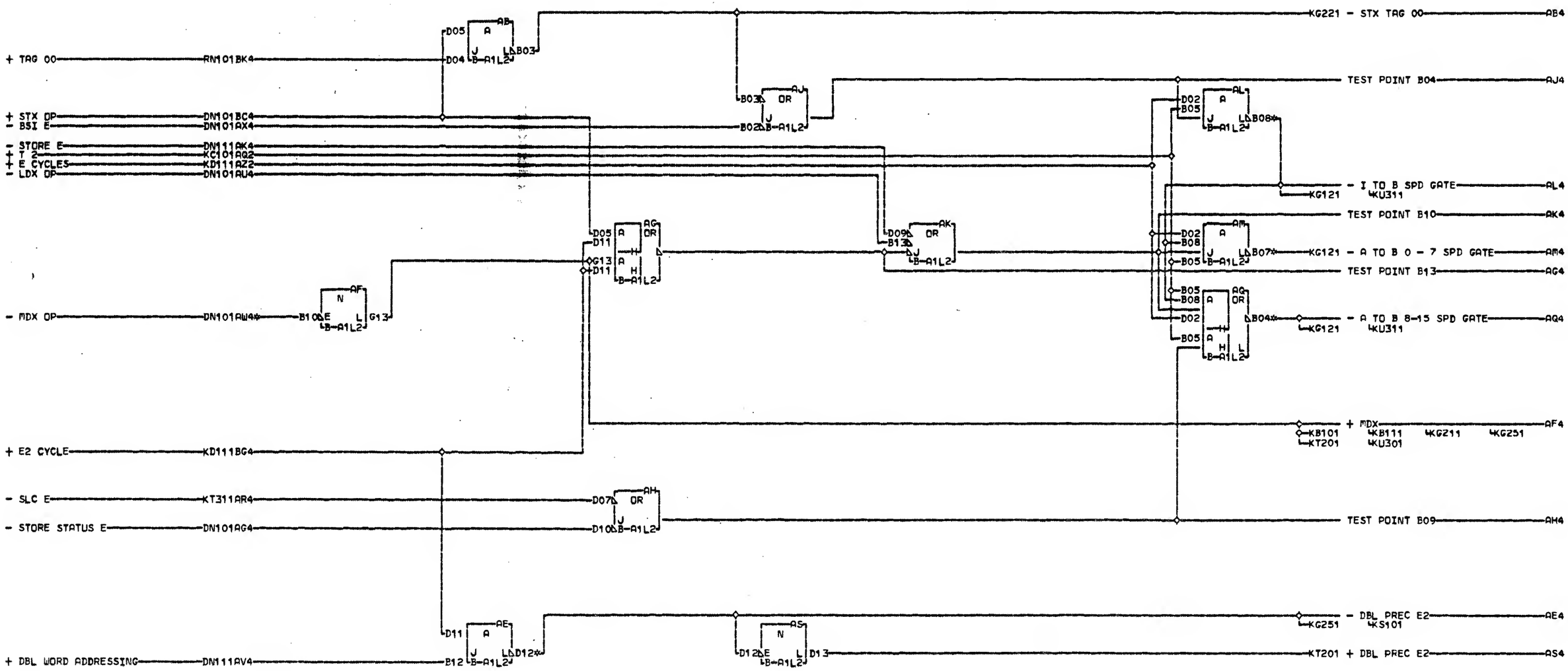


```
K
G
2
4
1
000

DN101AW4      AQ4 B-A1N2D05
    RESISTOR    01B-B1A2D05
    B-A1L2B10
AE4 RESISTOR
    B-A1L2D12
AL4 B-A1N2B06
  01B-B1A2B06
AM4 B-A1N2B05
  01B-B1A2B05
```

LOC. TYPE
B-A1L2 4624

I TO B AND A TO B GATE		K
STX T 00 MDX DBL PREC E2		G
—E.C.—HISTORY—	MACH.1131-C	2
		4
	FRAME 01	1
	IBM CORP. GPD	
DATE LAST EC		000
02-09-71 571150	P.N. 5889221	

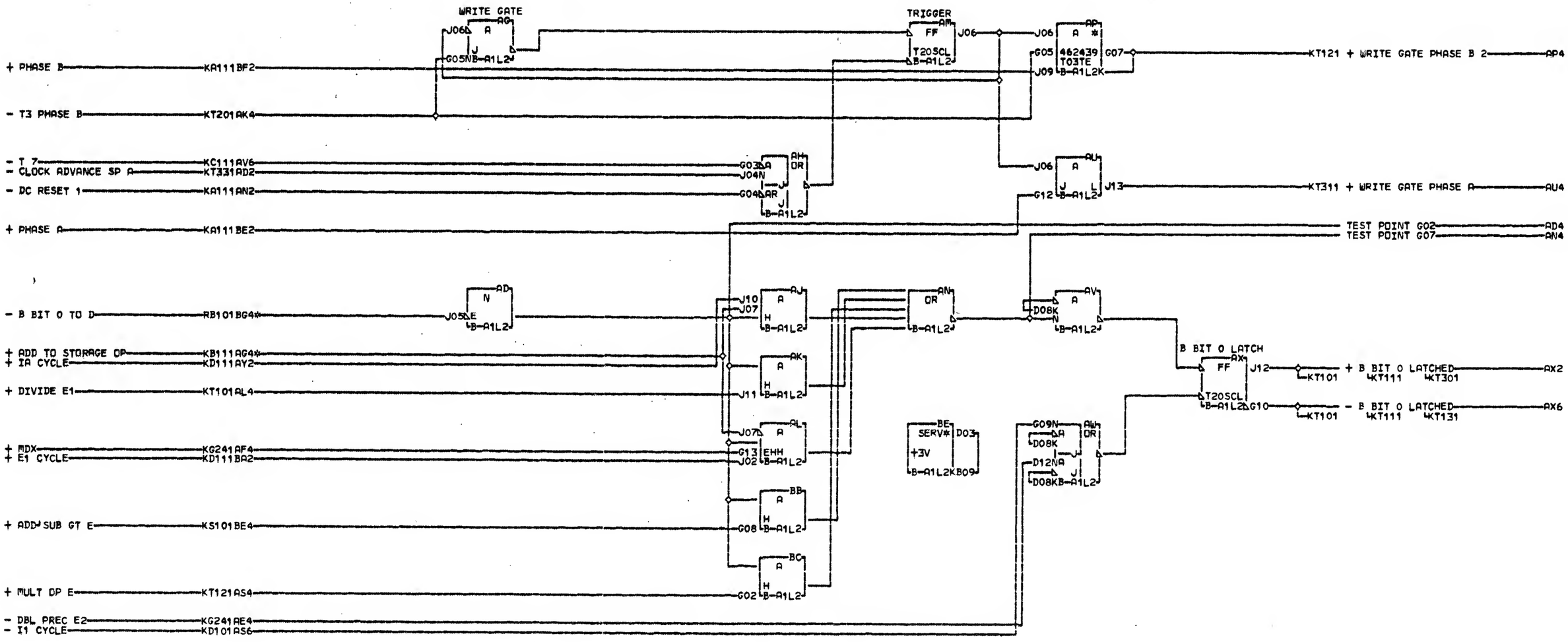

KB111AG4
RESISTOR
B-A1L2J07
RB101BG4
RESISTOR
B-A1L2J05

LOC. TYPE
B-A1L2 4624

WRITE GATE PHASE A AND B
B BIT 0 LATCHED
-E.C.-HISTORY- MACH.1131-C
FRAME 01
IBM CORP. GSD
DATE LAST EC
02-17-71 571150
P.N. 5889222

KG251 000

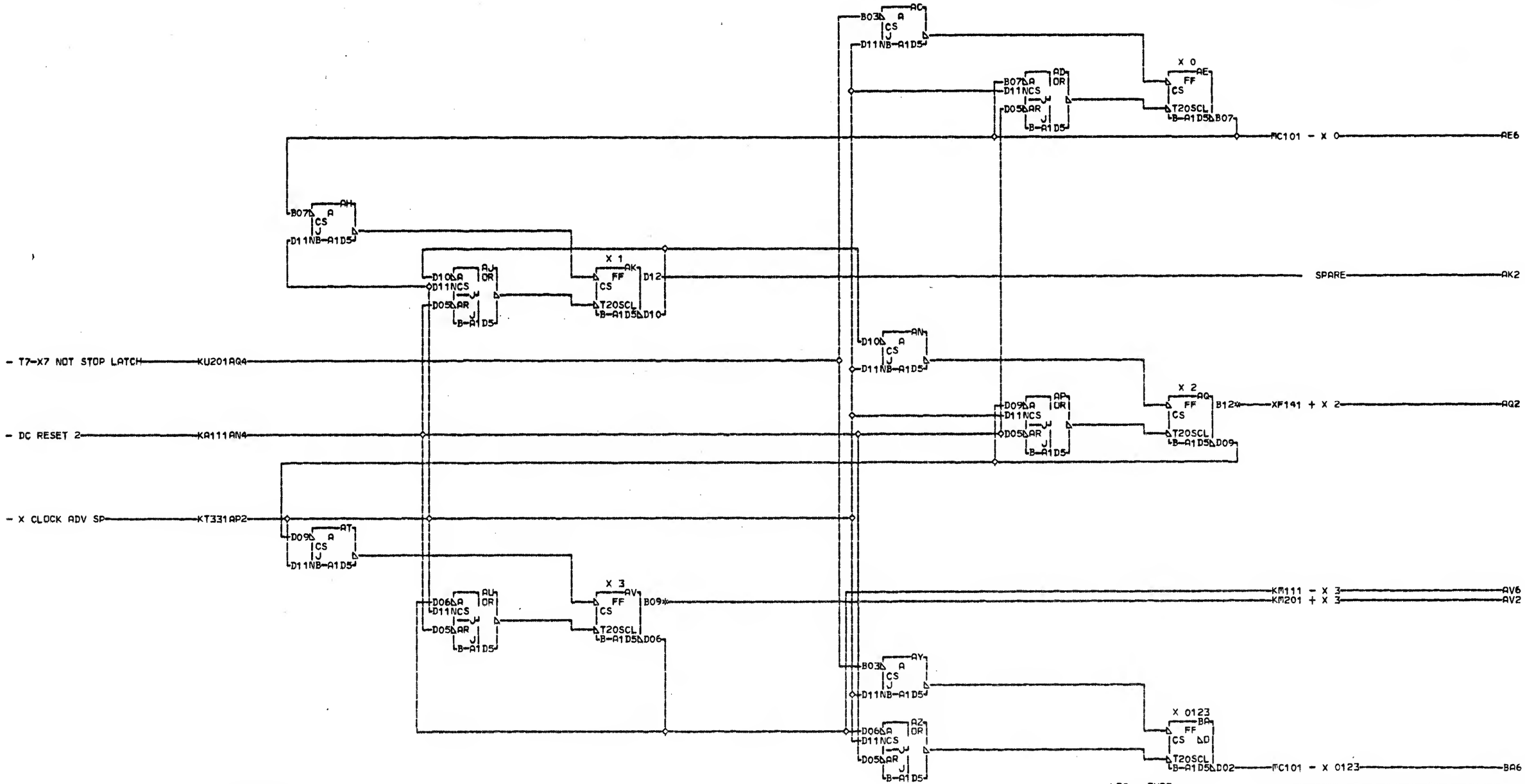

AQ2 B-A1A7B07
01A-C1N6B07
AV2 B-A1N8A04
01B-B1N8A04

LOC. TYPE
B-A1D5 3481

X CLOCK						
X 0	X 1	X 2	X 3	X 0123		
E.C.-HISTORY					MACH.1131-C	
					FRAME 01	
					IBM CORP. GSD	
DATE	LAST EC				P.N. 5889223	
02-26-71	571150					

KE101 000

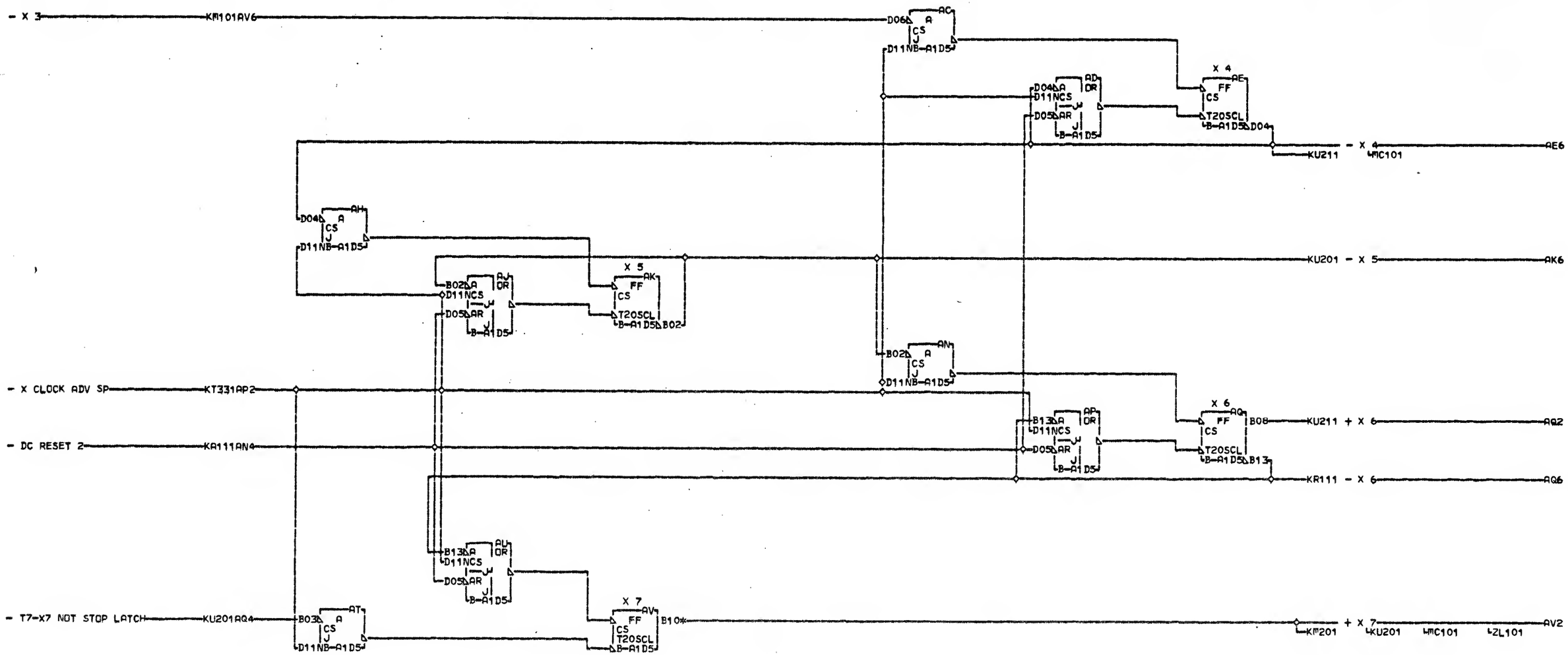

AV2 B-A1A4D07

LOC. TYPE
B-A1D5 3481

X CLOCK
X 4 X 5 X 6 X 7
E.C.-HISTORY
MACH.1131-C
FRAME 01
IBM CORP. GSD
DATE LAST EC
02-09-71 571150
P.N. 5889224

KM111 000

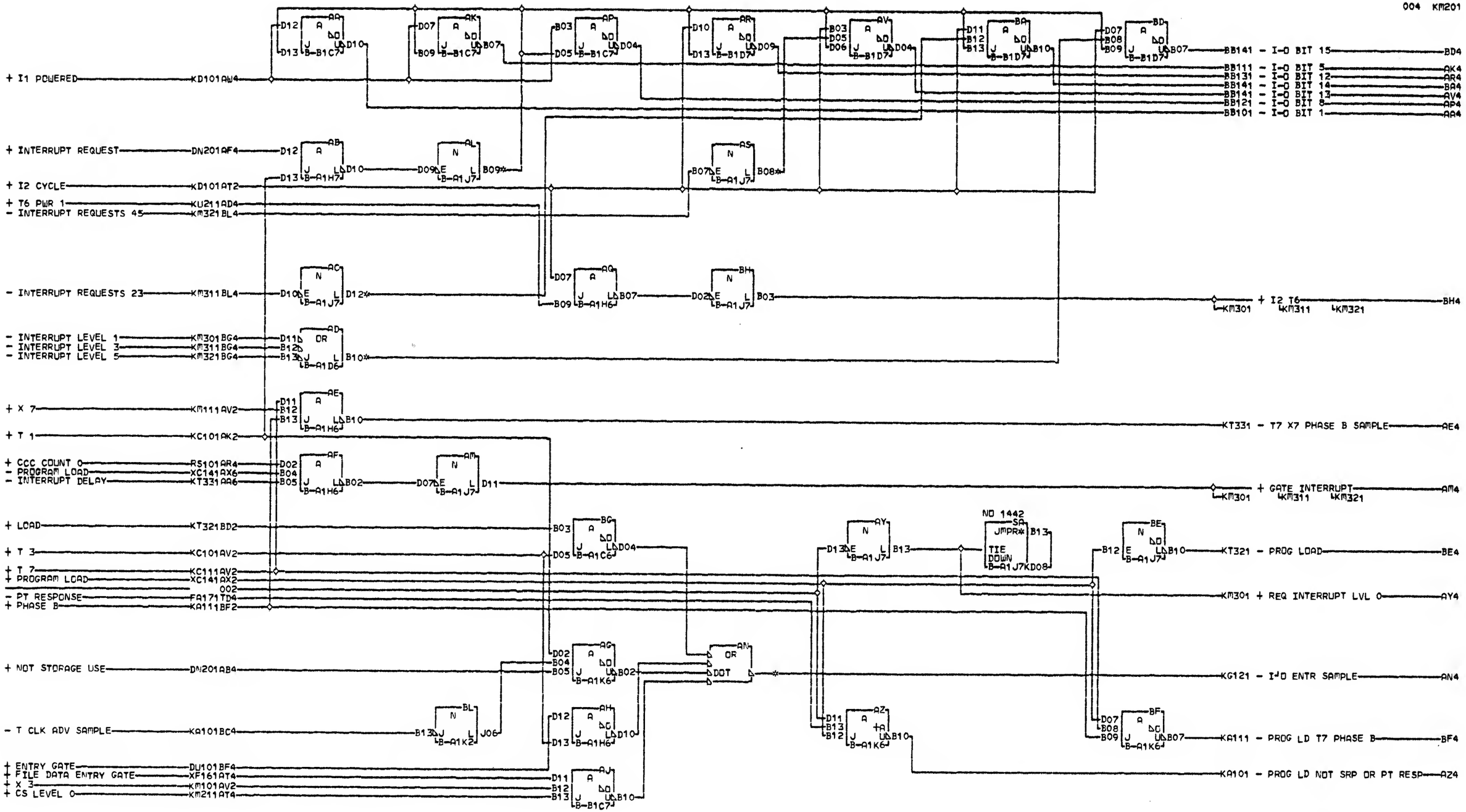

K E 2 0 1
004
SIM TO PN 5889225 EC 571150

AC4 B-A1N8A06 01B-B1M8E06
01B-B1N8A06
AD4 B-A1D8E04
01B-B1D8E04
AL4 B-A1M8C06
01B-B1M8C06
AN4 B-A1M8A06
01B-B1M8A06
AS4 B-A1M8E06

LOC.	TYPE
B-A1C6	0000
B-A1D6	0000
B-A1H6	0000
B-A1H7	0000
B-A1J7	0509
B-A1K2	7312
B-A1K6	0238
B-B1C7	0236
B-B1D7	0238

INTERRUPT ENTRY
E.C. HISTORY
MACH. 1131-C
FRAME 01
IBM CORP. GSD
DATE LAST EC
03-14-72 571155
P.N. 5889464
K E 2 0 1 004

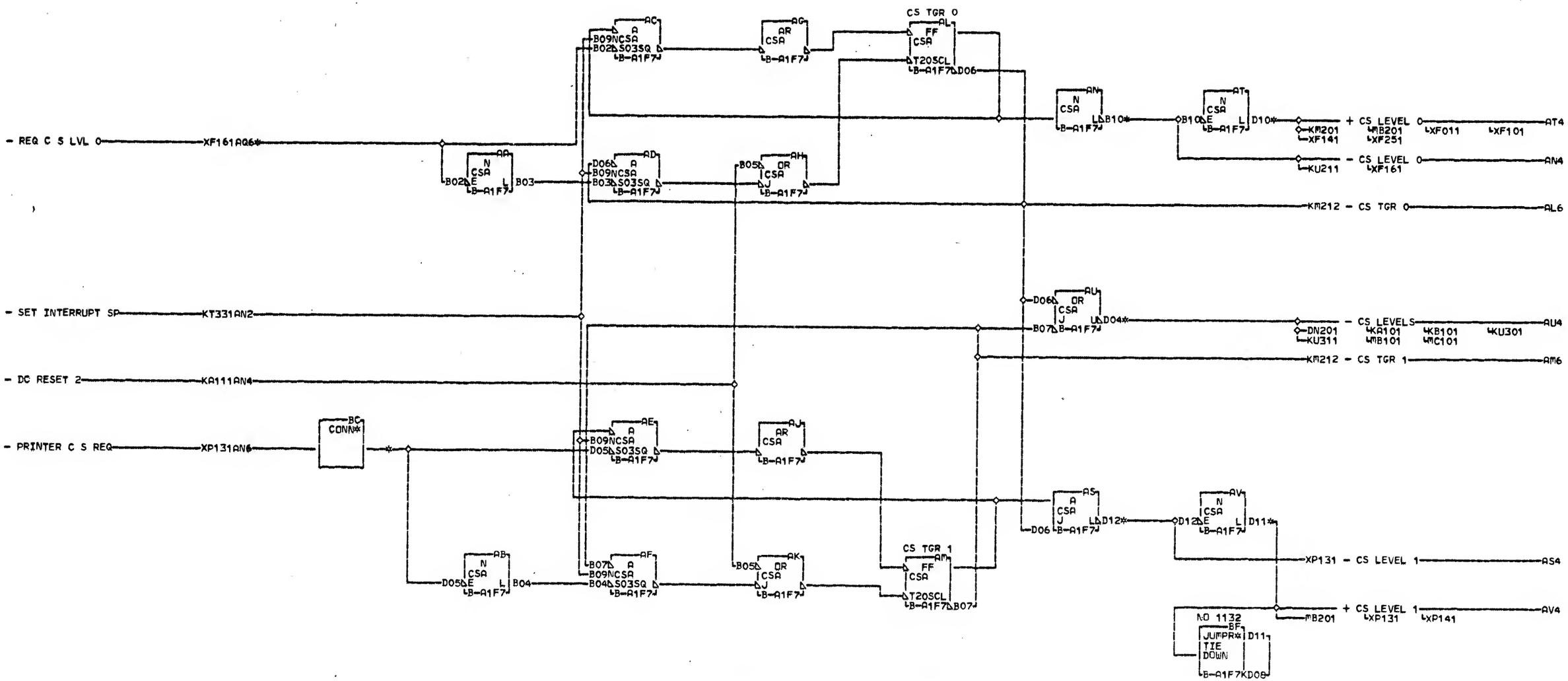

K
3
2
1
1
000

XF161AQ6 RESISTOR B-A1F7B02
AN4 B-A1A7B02 01A-C1N6B02
AS4 B-A1E8C06 01B-B1E8C06 01B-B1H8C06 01A-B1N5B05
AT4 B-A1M8E04 01B-B1M8E04 01B-B1D8A04 01A-C1N3D13
AU4 B-A1L8A06
AV4 B-A1L8E04
01B-B1L8E04 01B-B1J8A06 01A-B1N5B08
BC4 B-A1L8D04 01B-B1L8D04 01B-B1H8E06 RESISTOR B-A1F7D02
01B-B1L8E04 01B-B1J8A06 01A-B1N5B08 01B-B1L8D04 01B-B1H8E06 RESISTOR B-A1F7D05

LOC. TYPE
B-A1F7 3815

CYCLE STEAL
LEVELS 0 AND 1
—E.C.—HISTORY— MACH.1131-C
FRAME 01
IBM CORP. GSD
DATE LAST EC 02-26-71 571150
P.N. 5889226

K
3
2
1
1
000

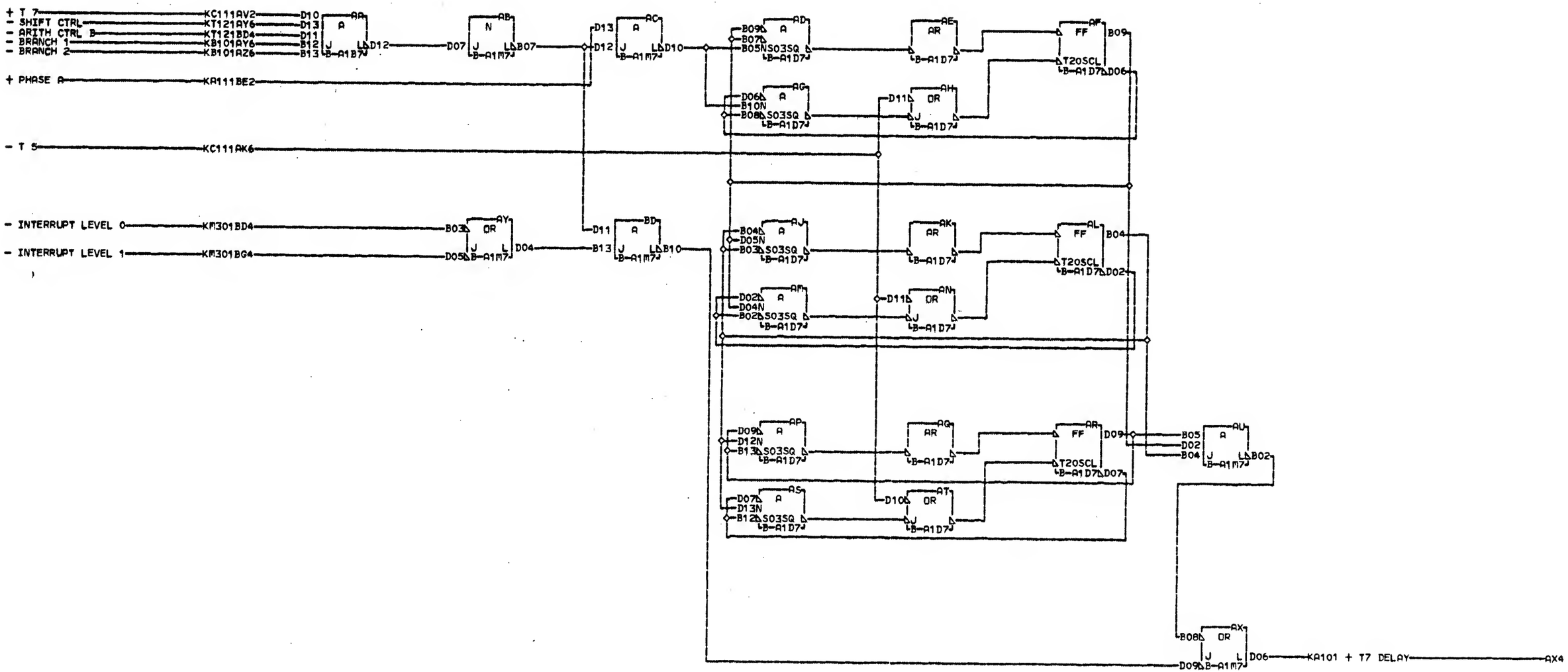

BC4 B-A1E8E06
01B-B1E8E06

LOC.	TYPE
B-A1B7	0247
B-A1D7	3794
B-A1J6	0069
B-A1M7	0000

T7 EXTEND

E.C.-HISTORY — MACH.1131-C

FRAME 01

IBM CORP. GSD

DATE LAST EC
02-26-71 571150

P.N. 5889227

KE212 000

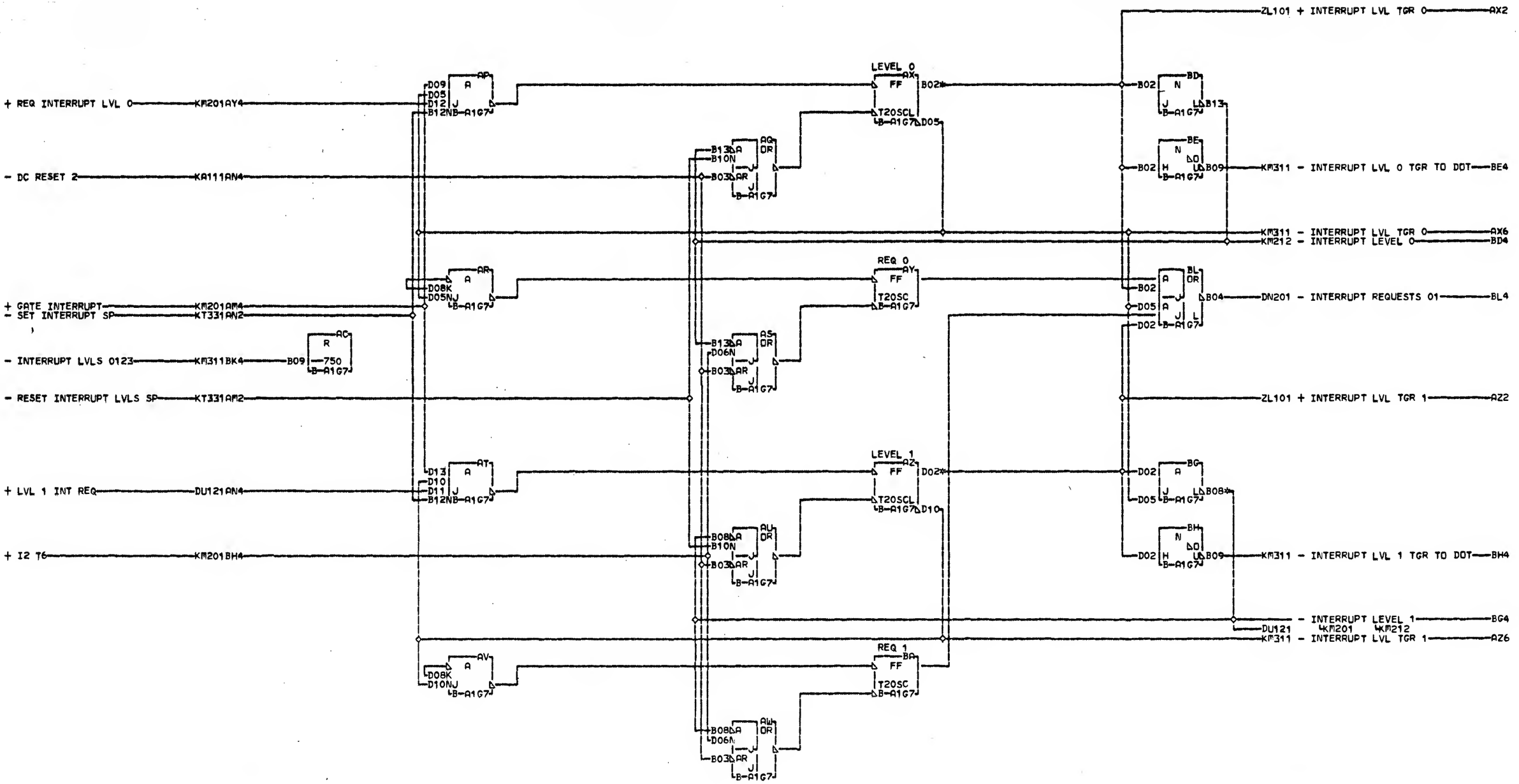

AX2 B-A1A4B08
RESISTOR
B-A1G7B02
AZ2 B-A1A4D09
RESISTOR
B-A1G7D02
BG4 B-A1A7B10
01A-C1N6B10

LOC. TYPE
B-A1G7 3761

INTERRUPT LEVELS 0 AND 1
—E.C.—HISTORY— MACH.1131-C
FRAME 01
IBM CORP. GSD
DATE LAST EC
02-26-71 571150
P.N. 5889228

KE301 000

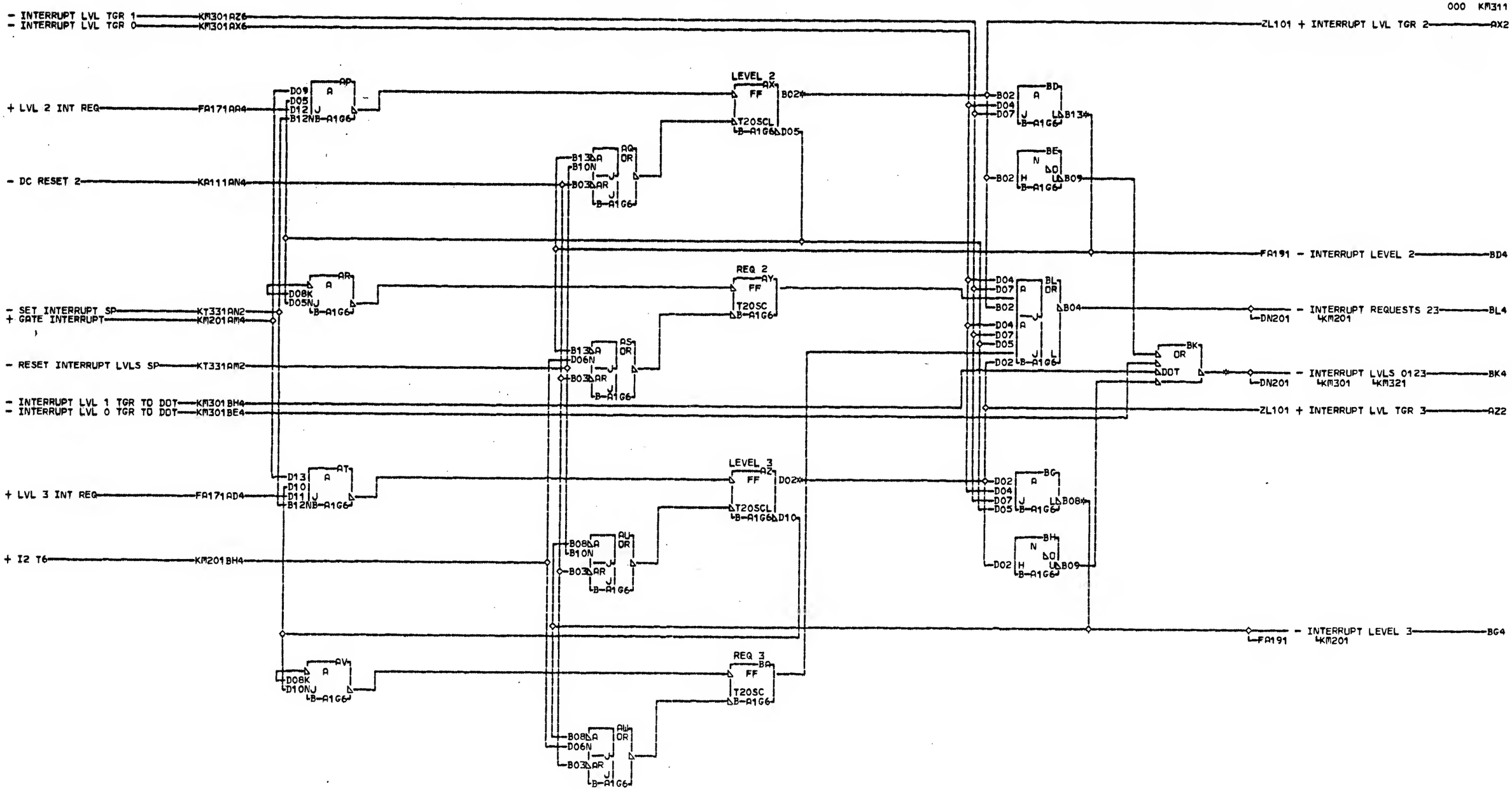

KE311 000

AX2 B-A1A4B09 01A-C1N6D13
RESISTOR BK4 RESISTOR
B-A1G6B02 B-A1G6B09
AZ2 B-A1A4D10
RESISTOR
B-A1G6D02
BD4 B-A1A7B13
01A-C1N6B13
BG4 B-A1A7D13

LOC. TYPE
B-A1G6 3761

INTERRUPT LEVELS 2 AND 3
E.C.-HISTORY
MACH.1131-C
FRAME 01
IBM CORP. GSD
DATE LAST EC
02-09-71 571150
P.N. 5889229

KE311 000

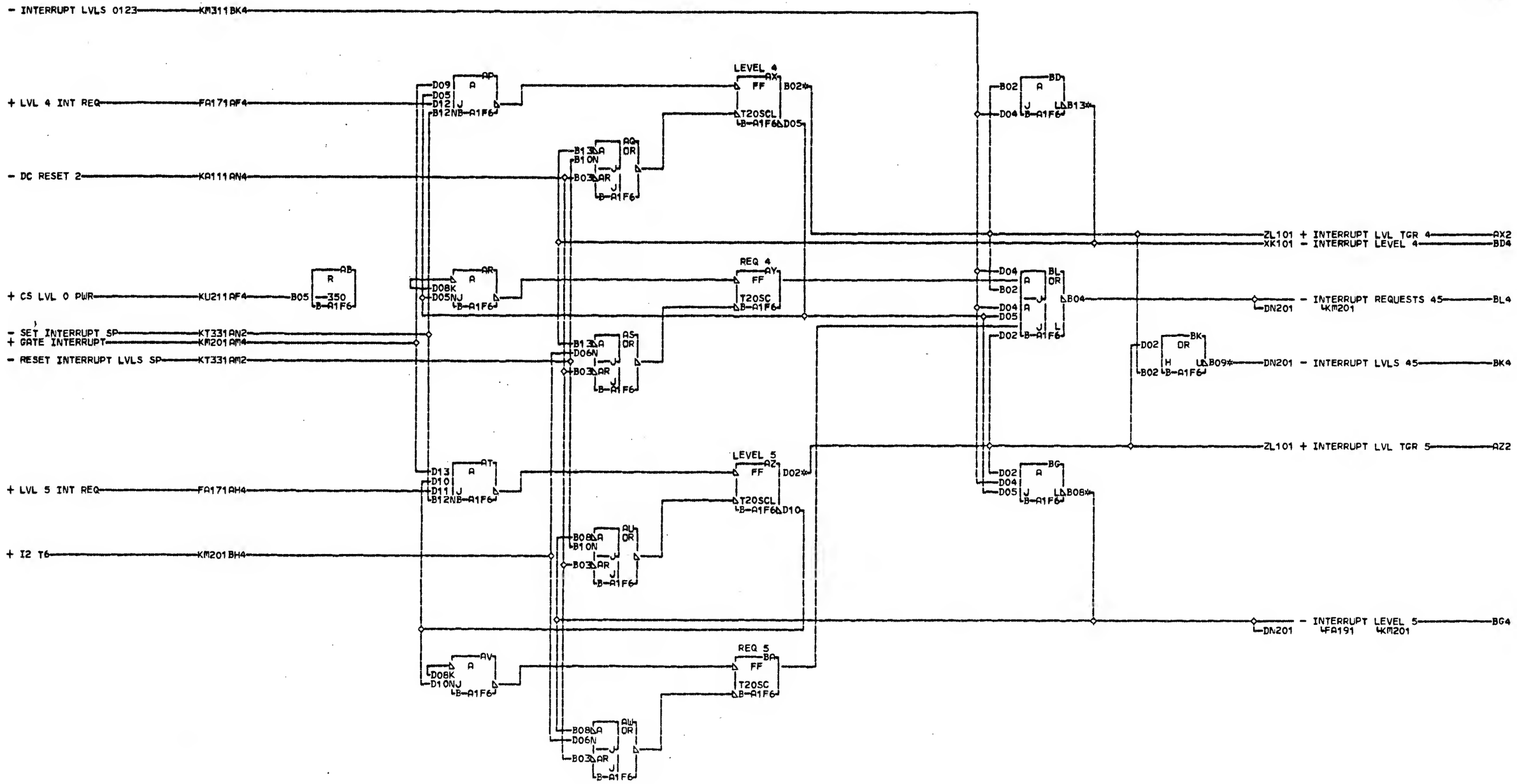

AX2 B-A1A4B10 RESISTOR B-A1F6B02
AZ2 B-A1A4D11 RESISTOR B-A1F6D02
BD4 B-A1A7B09 01A-C1N6B09
BG4 B-A1L8C04 01B-B1L8C04 01B-B1N5B13 01A-C1N2B13
BK4 RESISTOR B-A1F6B09

LOC. TYPE
B-A1F6 3761

INTERRUPT LEVELS 4 AND 5	KM321
-E.C.-HISTORY- MACH.1131-C	
FRAME 01	
IBM CORP. GSD	
DATE LAST EC 02-26-71 571150	P.N. 5889230 000

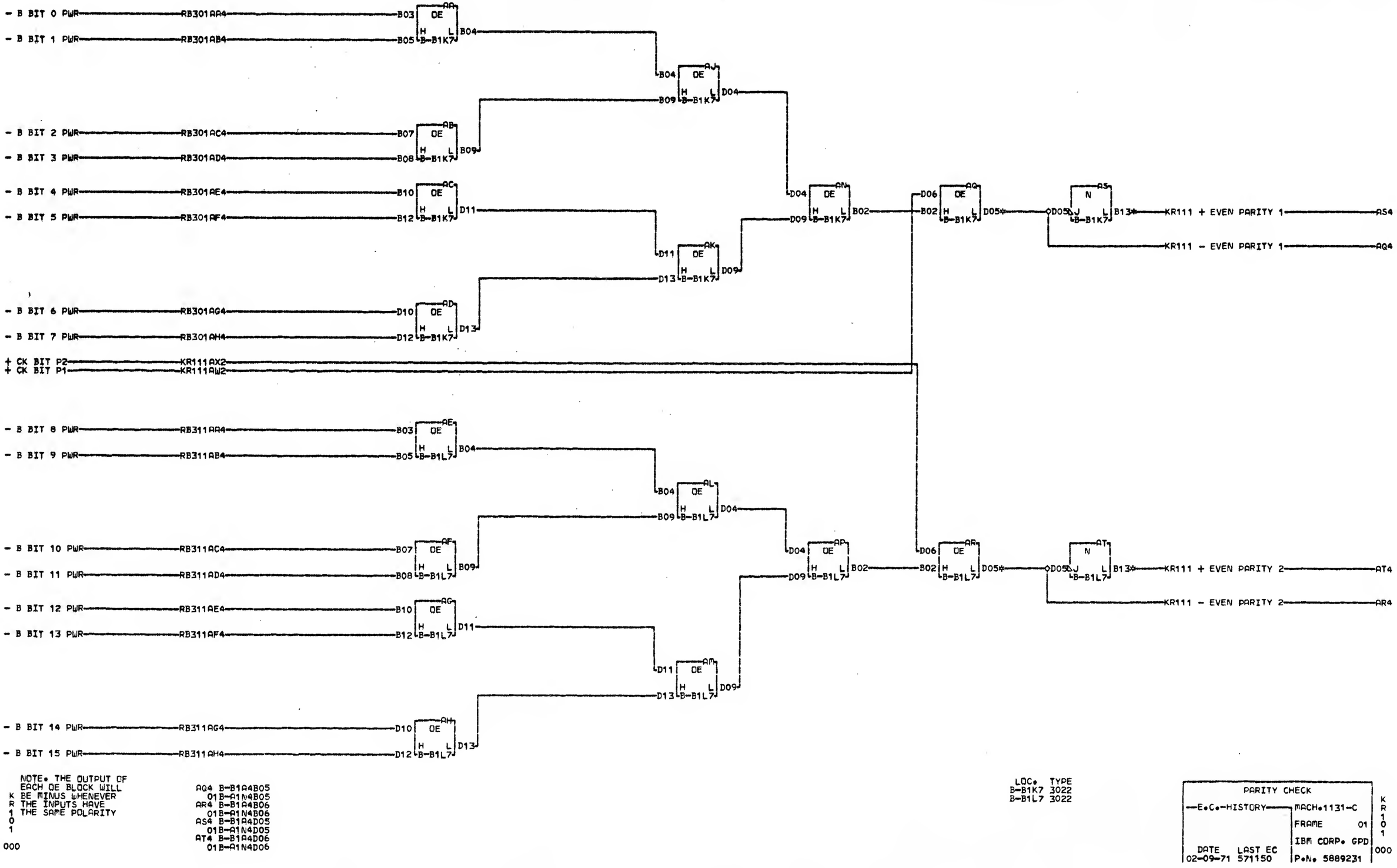

NOTE. THE OUTPUT OF EACH OE BLOCK WILL BE MINUS WHENEVER THE INPUTS HAVE THE SAME POLARITY

K 1 0

000

AQ4 B-B1A4B05
01 B-A1N4B05
AR4 B-B1A4B06
01 B-A1N4B06
AS4 B-B1A4D05
01 B-A1N4D05
AT4 B-B1A4D06
01 B-A1N4D06

LOC. TYPE
B-B1K7 3022
B-B1L7 3022

PARITY CHECK
E.C.-HISTORY
MACH.1131-C
FRAME 01
IBM CORP. GPD
P.N. 5889231
DATE LAST EC
02-09-71 571150

K R 1 0 1 000

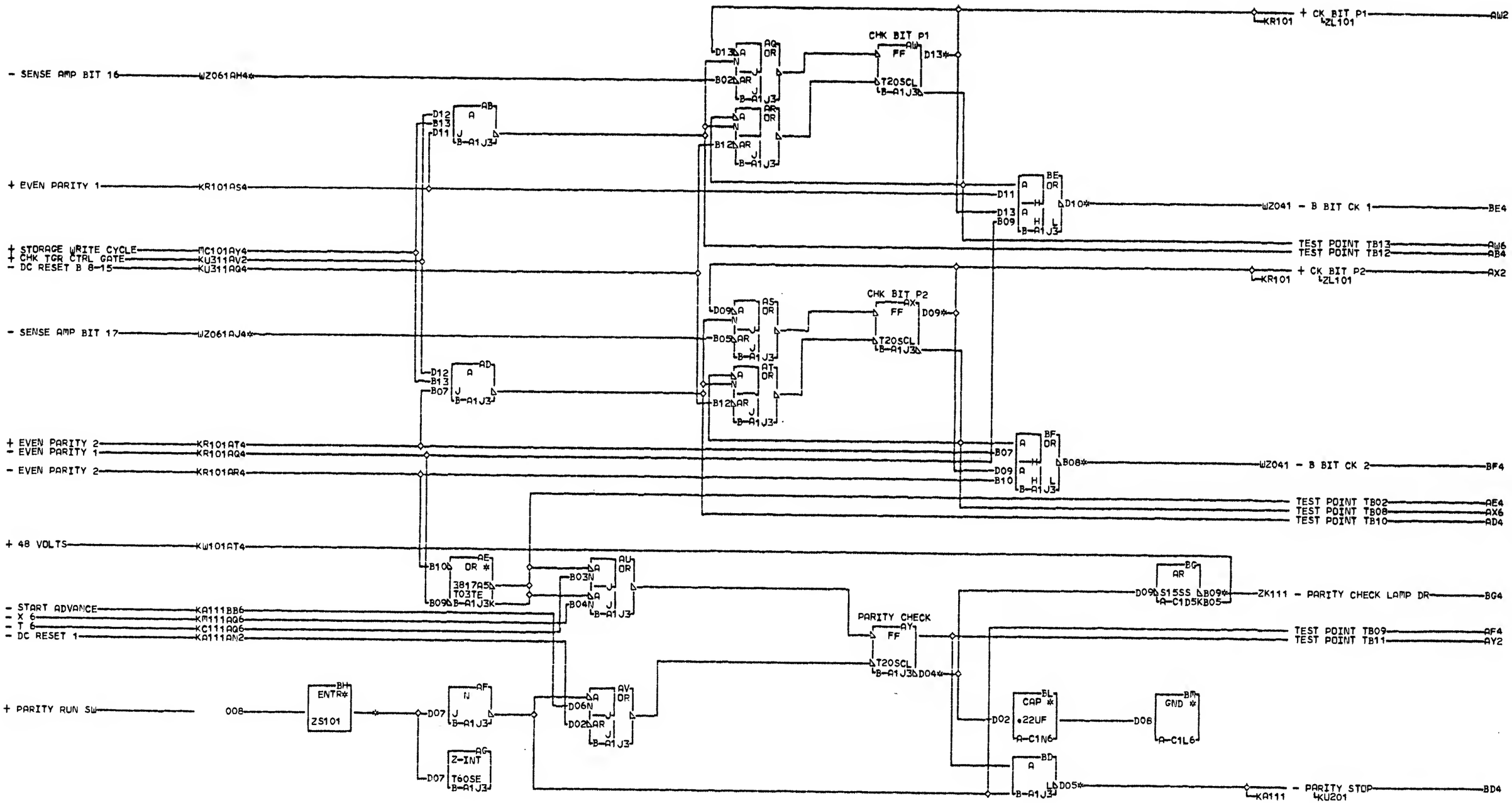

WZ061AH4 AX2 B-A1A3D07 BE4 B-A1F1C09 BH4 B-A1A5D04
RESISTOR 01B-A1N5D12 01B-B1F1C09
B-A1J3B02 01B-B1A5D12 01B-B1M1C09
WZ061AJ4 AY6 B-A1A7D02 01B-C1M1C09
RESISTOR 01A-C1N6D02 BF4 B-A1F1D09
B-A1J3B05 BD4 B-A1A7D11 01B-B1F1D09
AW2 B-A1A3B07 01A-C1N6D11 01B-B1M1D09
01B-A1N5B12 01A-C1A7D11 01B-C1M1D09
01B-B1A5B12 01A-B1N7D11 BG4 A-C1A5D12

LOC. TYPE
A-C1D5 3819
B-A1J3 3817

PARITY BIT TRIGGERS
PARITY STOP
E.C.-HISTORY MACH.1131-C
FRAME 01
IBM CORP. GSD
DATE LAST EC
03-14-72 571155
P.N. 5889465

KR111 004

004
SIM TO PN 5889232 EC 571150

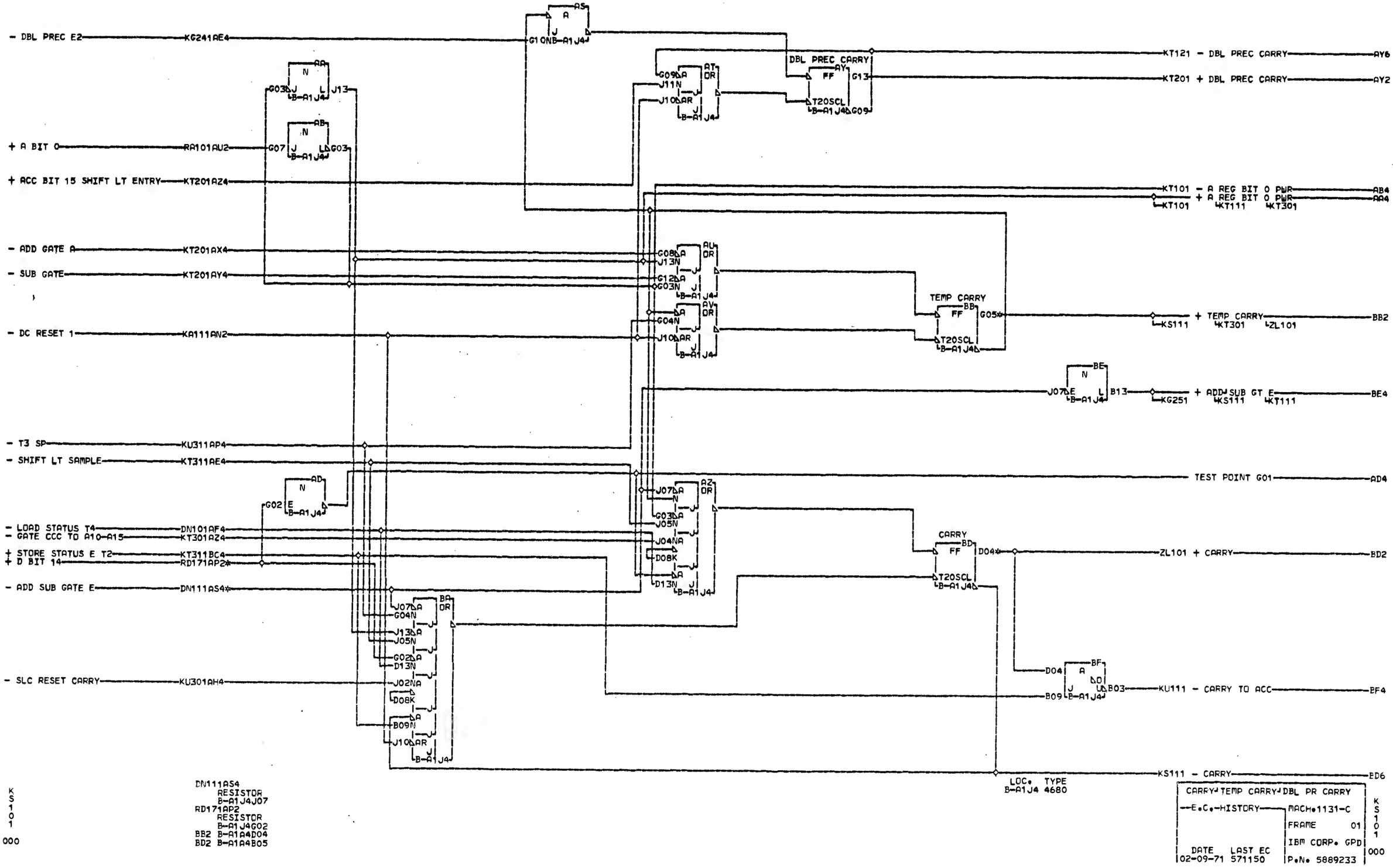

K S 1 0 1 000

DN111AS4
RESISTOR
B-A1J4J07
RD171AP2
RESISTOR
B-A1J4G02
BB2 B-A1A4D04
BD2 B-A1A4B05

CARRY/TEMP CARRY/DBL PR CARRY
E.C.-HISTORY
MACH.1131-C
FRAME 01
IBM CORP. GPD
DATE LAST EC
02-09-71 571150
P.N. 5889233

K S 1 0 1 000

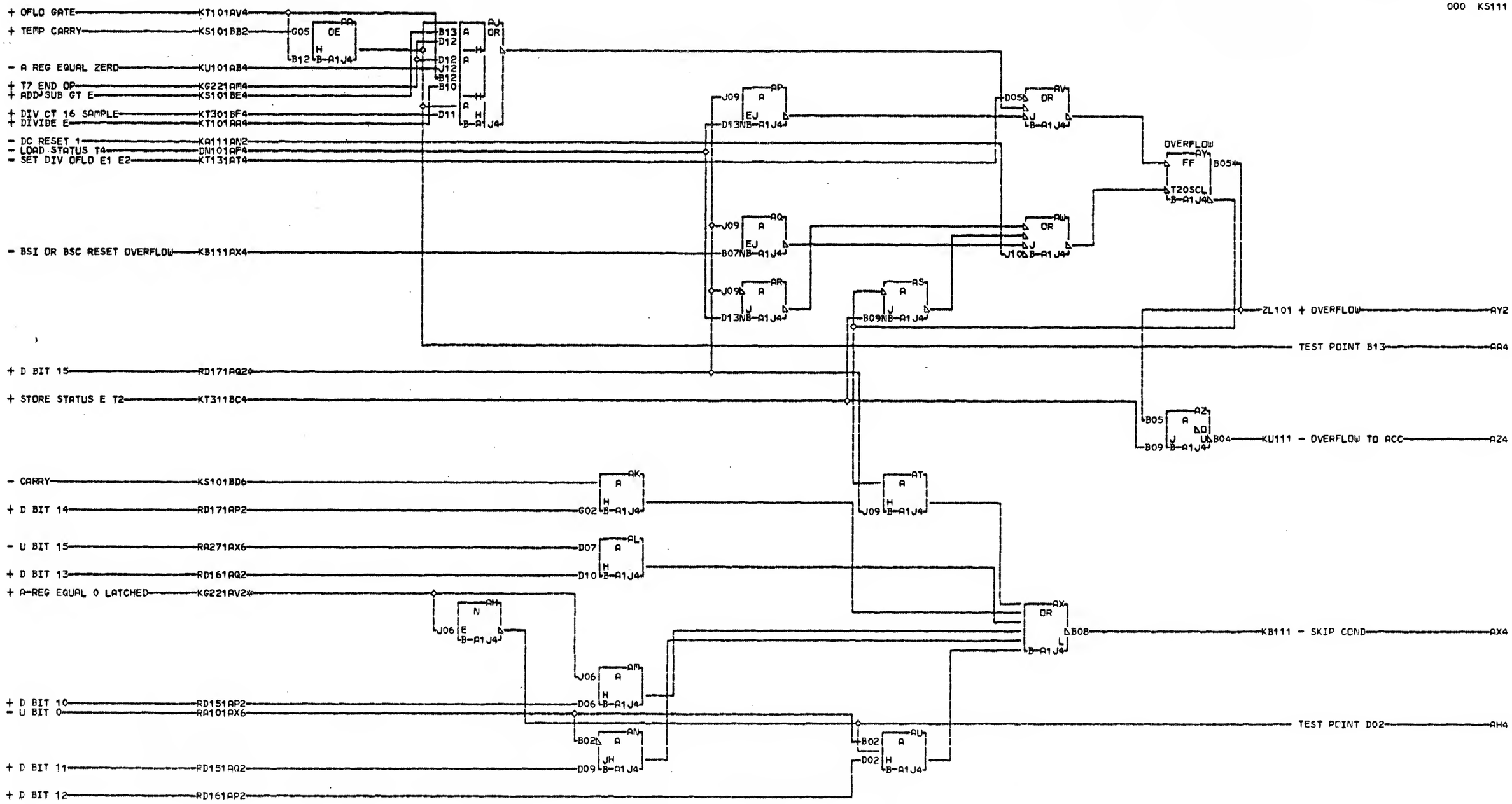
000 KS111
+ OFLO GATE KT101AV4
+ TEMP CARRY KS101BB2
- A REG EQUAL ZERO KU101AB4
+ T7 END OP KG221AM4
+ ADD SUB GT E KS101BE4
+ DIV CT 16 SAMPLE KT301BF4
+ DIVIDE E KT101AA4
- DC RESET 1 KA111AN2
- LOAD STATUS T4 DN101AF4
- SET DIV OFLO E1 E2 KT131AT4
- BSI OR BSC RESET OVERFLOW KB111AX4
+ D BIT 15 RD171AQ2*
+ STORE STATUS E T2 KT311BC4
- CARRY KS101BD6
+ D BIT 14 RD171AP2
- U BIT 15 RA271AX6
+ D BIT 13 RD161AQ2
+ A-REG EQUAL 0 LATCHED KG221AV2*
+ D BIT 10 RD151AP2
- U BIT 0 RA101AX6
+ D BIT 11 RD151AQ2
+ D BIT 12 RD161AP2
OVERFLOW
ZL101 + OVERFLOW AY2
TEST POINT B13 AA4
KU111 - OVERFLOW TO ACC AZ4
KB111 - SKIP COND AX4
TEST POINT D02 AH4
KG221AV2
RESISTOR
B-A1J4J06
RD171AQ2
RESISTOR
B-A1J4J09
AY2 B-A1A4D06
LOC. TYPE
B-A1J4 4680
OVERFLOW - SKIP COND
E.C.-HISTORY
MACH.1131-C
FRAME 01
IBM CORP. GPD
DATE LAST EC
02-09-71 571150
P.N. 5889234
000

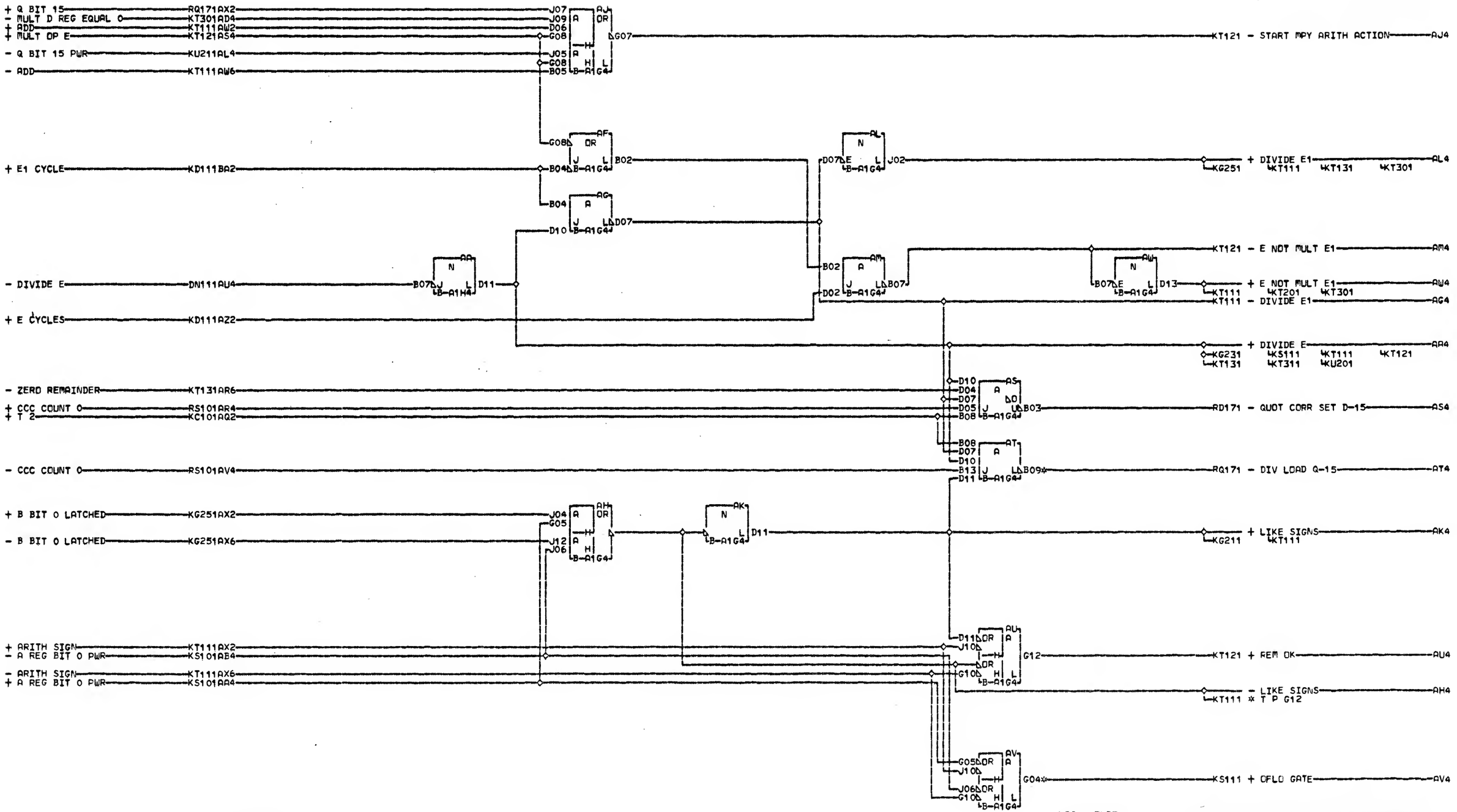

LOC. TYPE
B-A1G4 4616
B-A1H4 4607

AT4 B-A1N4D09
01B-B1A4D09
AV4 RESISTOR
B-A1G4G04

MPY ARITH ACTION E NOT MPY E1
DIV E1E1 LIKE SIGNS REM OK
E.C. HISTORY — MACH.1131-C
FRAME 01
IBM CORP. GPD
DATE LAST EC
02-09-71 571150
P.N. 5889235

KT101 000

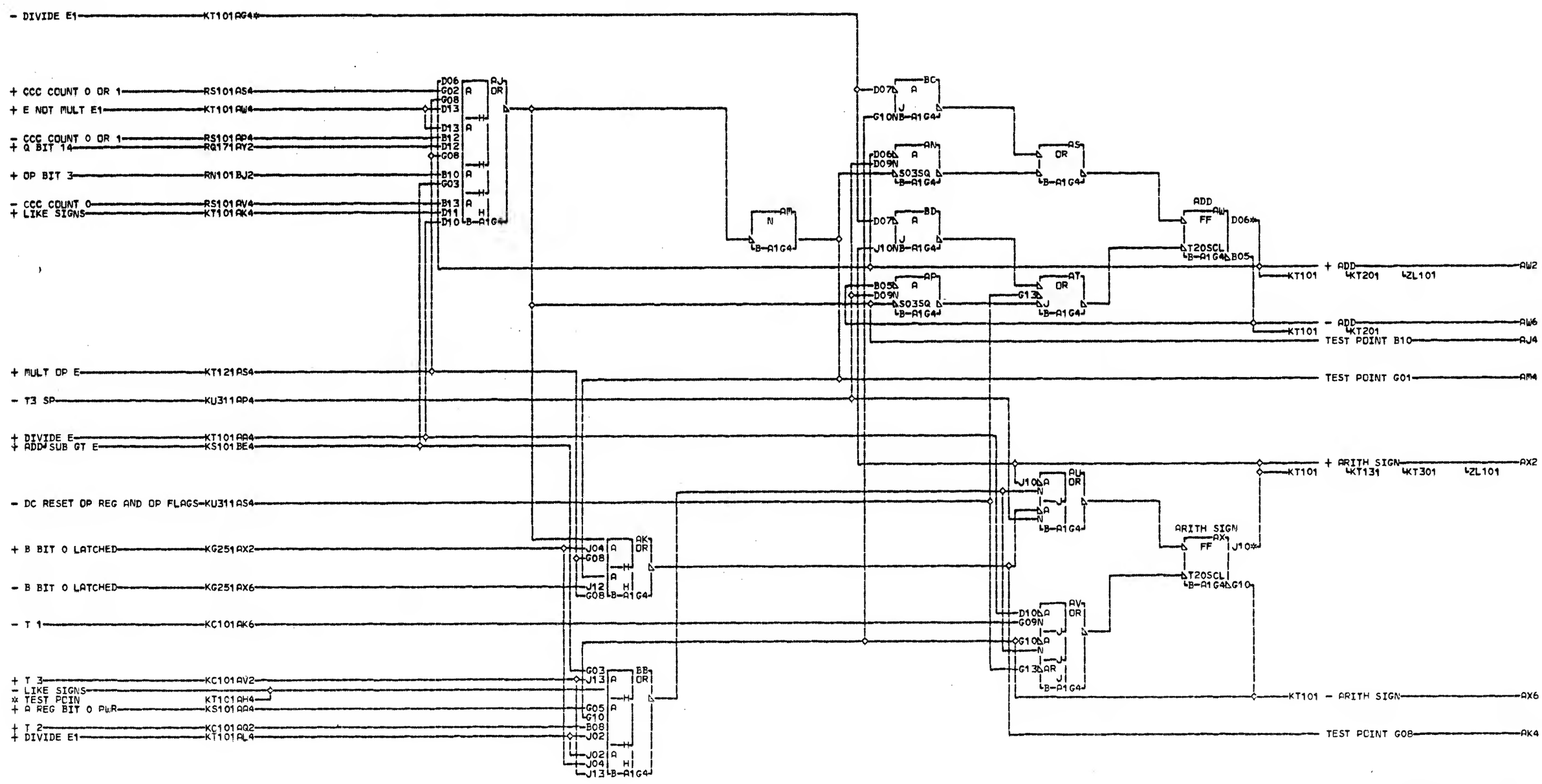

KT101AG4
RESISTOR
B-A1G4D07
AW2 B-A1A4B02
AX2 B-A1A4D02

LOC. TYPE
B-A1G4 4616

ARITHMETIC SIGN AND ADD

E.C.-HISTORY	MACH.1131-C	KT111
	FRAME 01	
	IBM CORP. GPD	
DATE LAST EC	P.N. 5889236	000
02-09-71 571150		

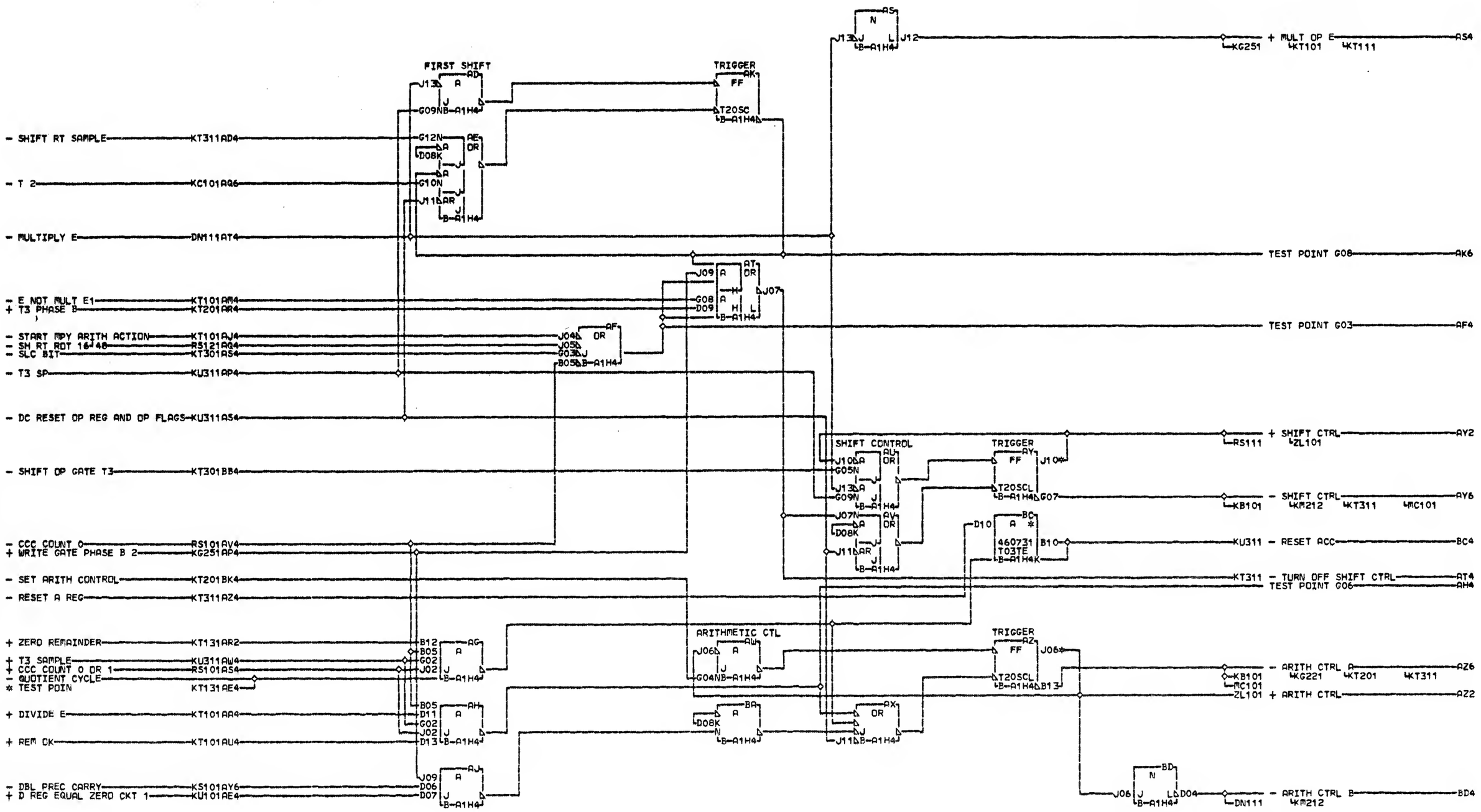
FIRST SHIFT
TRIGGER
SHIFT CONTROL
ARITHMETIC CTL
- SHIFT RT SAMPLE KT311AD4
- T 2 KC101AQ6
- MULTIPLY E DN111AT4
- E NOT MULT E1 KT101AM4
+ T3 PHASE B KT201AR4
- START MPY ARITH ACTION KT101AJ4
- SH RT RDT 16/48 RS121AQ4
- SLC BIT KT301AS4
- T3 SP KU311AP4
- DC RESET OP REG AND OP FLAGS KU311AS4
- SHIFT OP GATE T3 KT301BB4
- CCC COUNT 0 RS101AV4
+ WRITE GATE PHASE B 2 KG251AP4
- SET ARITH CONTROL KT201BK4
- RESET A REG KT311AZ4
+ ZERO REMAINDER KT131AR2
+ T3 SAMPLE KU311AW4
+ CCC COUNT 0 DR 1 RS101AS4
- QUOTIENT CYCLE
* TEST POIN KT131AE4
+ DIVIDE E KT101AA4
+ REM CK KT101AU4
- DBL PREC CARRY KS101AY6
+ D REG EQUAL ZERO CKT 1 KU101AE4
+ MULT OP E KT101 KT111 AS4
TEST POINT G08 AK6
TEST POINT G03 AF4
+ SHIFT CTRL RS111 ZL101 AY2
- SHIFT CTRL KB101 KM212 KT311 MC101 AY6
KU311 - RESET ACC BC4
KT311 - TURN OFF SHIFT CTRL AT4
TEST POINT G06 AH4
- ARITH CTRL A KB101 MC101 KG221 KT201 KT311 AZ6
ZL101 + ARITH CTRL AZ2
- ARITH CTRL B DN111 KM212 BD4
460731 T03TE
LOC. TYPE
B-A1H4 4607
AY2 B-A1A4B04
AZ2 B-A1A4B03
MPY E SHIFT CTRL
ARITH CTRL
E.C. HISTORY
MACH. 1131-C
FRAME 01
IBM CORP. GSD
DATE LAST EC
02-17-71 571150
P.N. 5889237
K T 1 2 1 000

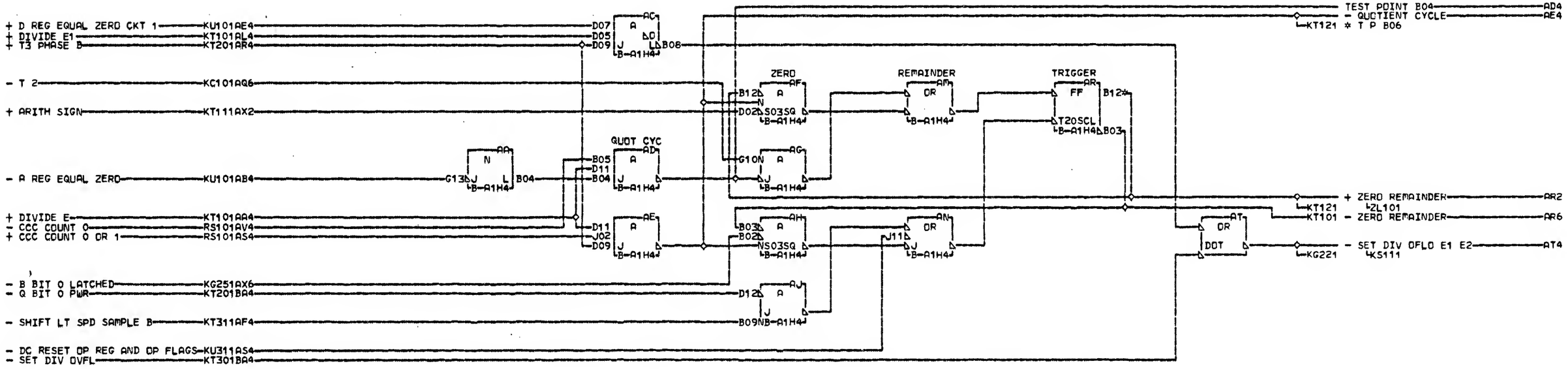

AR2 B-A1A4D05

LOC. TYPE
B-A1H4 4607

ZERO REMAINDER SET DIV CALC E1 E2	K T 1 3 1
—E.C.—HISTORY— MACH.1131-C	
FRAME 01	
IBM CORP. GPD	000
DATE LAST EC 02-09-71 571150	P.N. 5889238

K
T
1
3
1

000

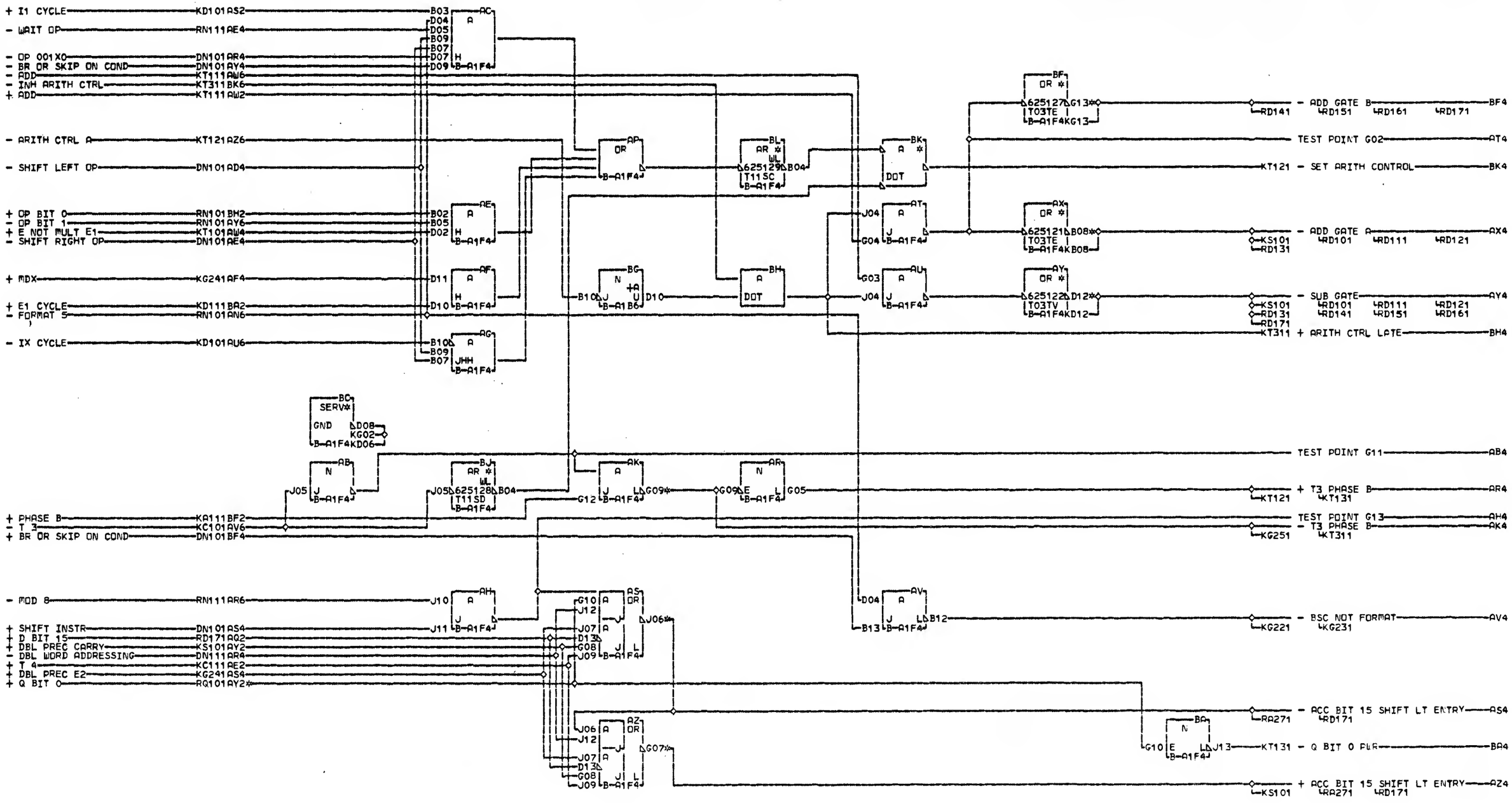

K T 2 0 1 000

RQ101AY2 RESISTOR B-A1F4G10 AY4 B-A1N4D11, 01B-B1A4D11
AK4 RESISTOR B-A1F4G09 AZ4 B-A1N4B13, 01B-B1A4B13
AS4 B-A1N4D13, 01B-B1A4D13
AX4 B-A1N4B11, 01B-B1A4B11
BF4 B-A1N5D06, 01B-B1A5D06

LOC.	TYPE
B-A1B6	3024
B-A1F4	6251

ADD SUB GT A 15 SHIFT LT ENTR
SET ARITH CTRL T3 PHASE B
E.C.-HISTORY MACH.1131-C
FRAME 01
IBM CORP. GSD
DATE LAST EC
02-09-71 571150
P.N. 5889239

K T 2 0 1 000

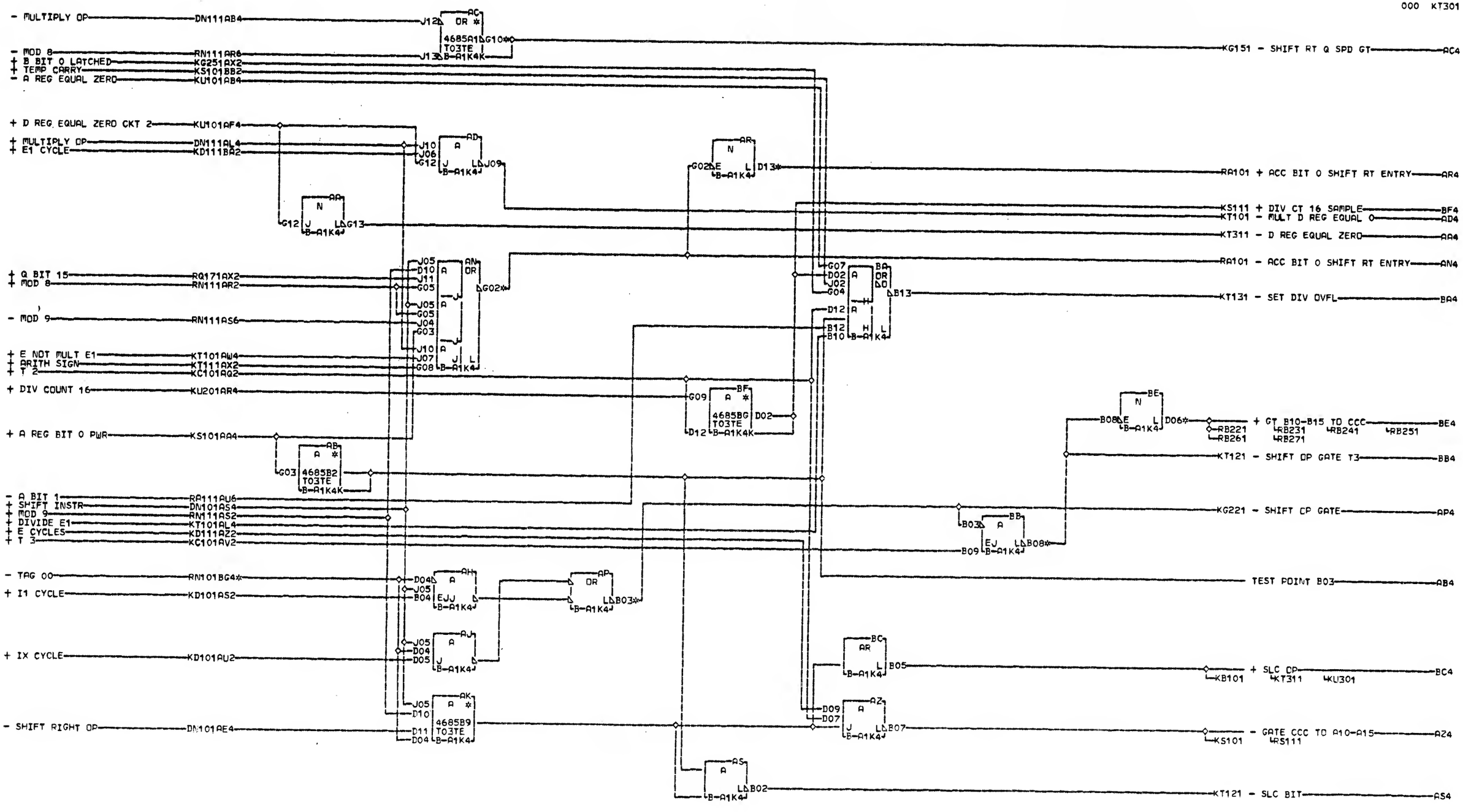

KT301
000

RN101BG4 RESISTOR B-A1K4D04
AC4 B-A1N3D06 01B-B1A3D06
AN4 B-A1N4D12 01B-B1A4D12
RESISTOR B-A1K4G02

AP4 RESISTOR B-A1K4B03
AR4 B-A1N4B12 01B-B1A4B12
BB4 RESISTOR B-A1K4B08
BE4 B-A1N3D10 01B-B1A3D10

LOC. TYPE
B-A1K4 4685

A BIT 0 SHIFT RT ENTR SLC
SHIFT OP GATE SET DIV OFLO
E.C.-HISTORY MACH.1131-C
FRAME 01
IBM CORP. GSD
DATE LAST EC
02-09-71 571150
P.N. 5889240

KT301 000

+ E CYCLES — KD111AZ2
- TURN OFF SHIFT CTRL — KT121AT4
- ARITH CTRL A — KT121AZ6
- SHIFT LEFT OP — DN101AD4*
- CCC COUNT 0 OR 1 — RS101AP4
+ T 3 — KC101AV2
- D REG EQUAL ZERO — KT301AA4
+ DBL WORD ADDRESSING — DN111AV4
+ WRITE GATE PHASE A — KG251AU4
- SHIFT CTRL — KT121AY6*
+ CCC COUNT 0 — RS101AR4
+ DIVIDE E — KT101AA4
+ T 1 — KC101AK2
+ SH RT ROT 16/48 — RS121AS4
- XIO OP — DN101AC4
+ E1 CYCLE — KD111BA2
+ SLC OP — KT301BC4
+ MULTIPLY OP — DN111AL4
+ I1 POWERED — KD101AW4
+ T 2 — KC101AQ2
+ PHASE B — KA111BF2
- T 1 — KC101AK6
+ ARITH CTRL LATE — KT201BH4
- T3 PHASE B — KT201AK4
- DC RESET 2 — KA111AN4
- I2 CYCLE — KD101AT6
- I1 CYCLE — KD101AS6
+ T 0 — KC101AE2
- STORE STATUS E — DN101AG4
+ STORE STATUS E — DN101AQ4

TEST POINT G07 — AB4
KG221 - SHIFT SAMPLE — AC4
KG141 - SHIFT LT SPD SAMPLE B (KT131) — AF4
KG151 - SHIFT LT SAMPLE (KS101) — AE4
KG151 - SHIFT RT SAMPLE (KT121) — AD4
KG131 - EXCHG A AND Q SPD SAMPLE (RS121) — AP4
KG231 - SLC E (KG241) — AR4
KT121 - RESET A REG — AZ4
TEST POINT B07 — AQ4
KT201 - INH ARITH CTRL — BK6
TEST POINT B03 — AN4
KG211 - I CYCLE INCR IAR SAMPLE — BA4
KS101 + STORE STATUS E T2 (KS111) — BC4

DN101AD4	01 B-B1A3B07		
RESISTOR	RESISTOR		
B-A1L4J06	B-A1K2J05		
KT121AY6	AF4 B-A1N3B06		
RESISTOR	01 B-B1A3B06		
B-A1L4J13	RESISTOR		
AD4 B-A1N3D07	B-A1K2G09		
01 B-B1A3D07	AP4 B-A1N3B08		
AE4 B-A1N3B07	01 B-B1A3B08		

LOC.	TYPE
B-A1K2	7312
B-A1K7	3794
B-A1L4	4614

SHIFT RT/LT SAMPLE SLC E
RESET ACC I CYCLE IAR INCR
—E.C.—HISTORY— MACH.1131-C
FRAME 01
IBM CORP. GSD
DATE LAST EC
02-09-71 571150
P.N. 5889241

KT311 000

+ SINGLE STORAGE CYCLE MODE — 015 — BF ENTR* ZL111
+ SINGLE INSTR MODE — 016 — BF ENTR* ZL111

J12 AA Z-INT T60SE B-A1B4
J10 AJ Z-INT T60SE B-A1B4
J12 AB N E LA J11 B-A1B4
J10 AK N E LA G12 B-A1B4
KA101 - SINGLE INSTRUCTION — AK4
KA101 - SINGLE STORAGE CYCLE — AB4

+ CE KEY SW — 021 — BE ENTR* YP131
+ CE KEY SW — 011 — BE ENTR* YP131

+ POWER ON RESET — 022 — BA ENTR* YP151

G13 AC Z-INT T60SE B-A1B4
J13 AS Z-INT T60SE B-A1B4
G13 AD N E LA G10 B-A1B4
J13 AT N E LA G09 B-A1B4
KW101 - CE KEY SW — AT4
KA111 - POWER ON RESET — AD4
XT331 + POWER ON RESET — BR4
KM201 + LOAD — BD2

+ LOAD — 023 — BD ENTR* ZL111
+ LOAD/DISPLAY MODE — 018 — BD ENTR* ZL111

D09 AE Z-INT T60SE B-A1B4
J05 AU Z-INT T60SE B-A1B4
D09 AF N E LA J07 B-A1B4
J05 AV N E LA J06 B-A1B4
KU211 - STORAGE LOAD/DISPLAY — AV4

+ STORAGE LOAD/DISPLAY 1 — 017 — BB ENTR* ZS101
XC141 - LOAD — AF4
+ STORAGE LOAD/DISPLAY 2 — 019 — BB ENTR* ZS101

B08 AG Z-INT T60SE B-A1B4
G04 AL Z-INT T60SE B-A1B4
D11 AN Z-INT T60SE B-A1B4
J02 AW Z-INT T60SE B-A1B4
G04 AM N E LA G03 B-A1B4
D11 AP N E LA B13 B-A1B4
J02 AX N E L G02 B-A1B4
KA111 + PROG START KEY 1 (KU201) — AX4
XC141 - PROG START KEY 1 — BC2

- PROG START KEY 1 — 024 — BC ENTR* ZK111
+ PROG START KEY 2 — 020 — BC ENTR* ZK111

AY OR DOT
- LOAD/DISPLAY/PROGRAM LOAD (KG231) — KD101 — AY4

- PROG LOAD — KM201 BE4
KA111 + PROG START KEY 2 — BC6

KT321 004
SIM TO PN 5889242 EC 571150

AT4 B-A1A7D10 01B-A1A7B04
01A-C1N6D10 01A-C1N6B04
BA4 B-A1A6D05 BC6 B-A1A5D07
01A-C1N4D05 BD2 B-A1A5B03
01A-C1A7B09 BD6 B-A1A5B02
01A-B1N7B09 BE4 B-A1A5B12
BB2 B-A1A5B04 BF2 B-A1A5D12
BB6 B-A1A5B05 BF6 B-A1A5D11
BC2 B-A1A5D06

LOC. TYPE
B-A1B4 6212

CONSOLE SIGNAL INTEGRATORS
E.C. HISTORY — MACH. 1131-C
FRAME 01
IBM CORP. GSD
P.N. 5889466
DATE LAST EC
03-14-72 571155

KT321 004

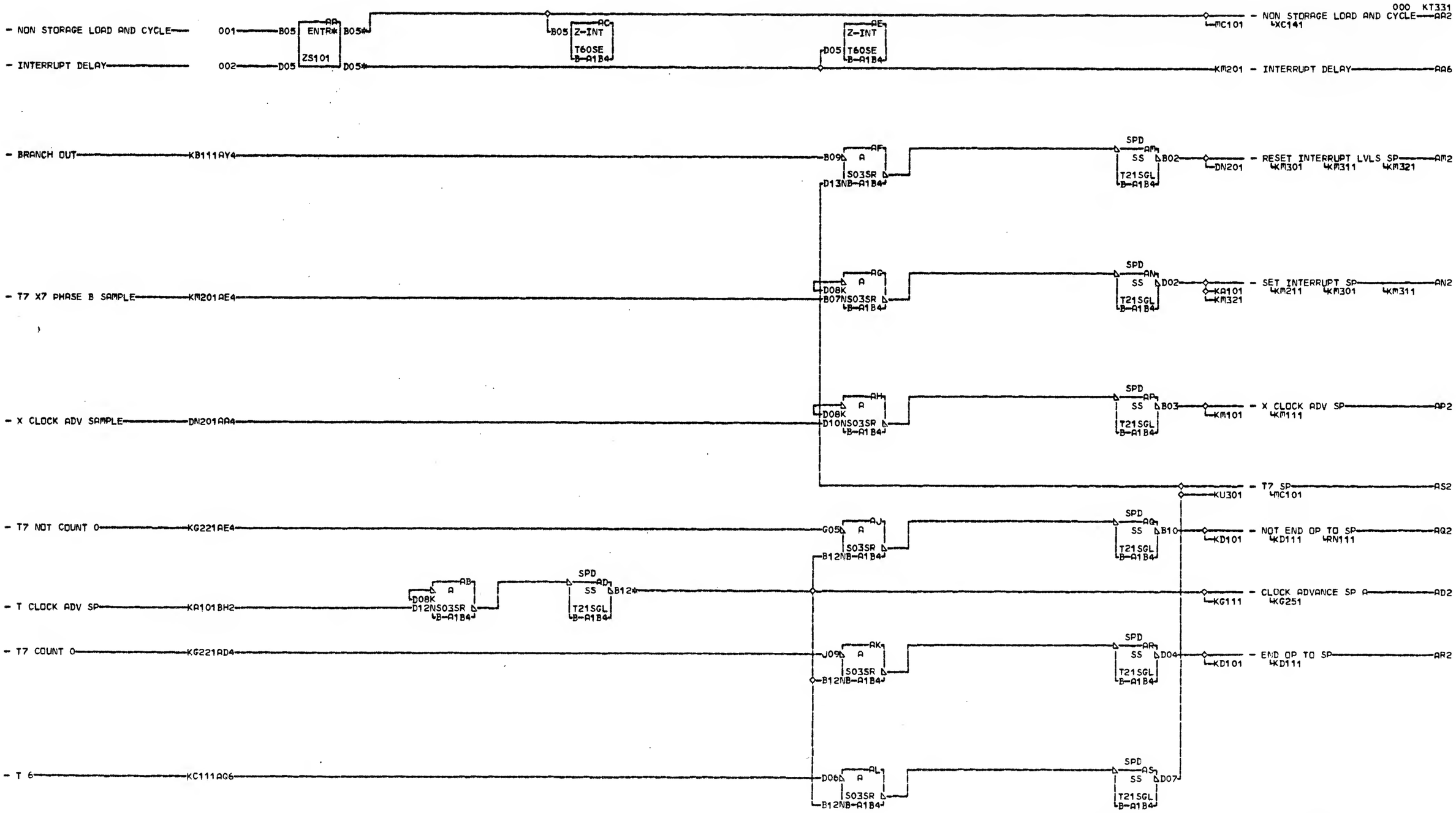

K
T
3
3
1

000

AA2 B-A1A5D05
AA6 B-A1A5B13
AD2 B-A1N3B03
01B-B1A3B03

LOC. TYPE
B-A1B4 6212

INT LVL SET-RESET SPD T7 SPD
CLOCK ADV SPD END OP TO SPD
-E.C.-HISTORY- MACH.1131-C
FRAME 01
IBM CORP. GPD
DATE LAST EC
02-09-71 571150
P.N. 5889243

K
T
3
3
1
000

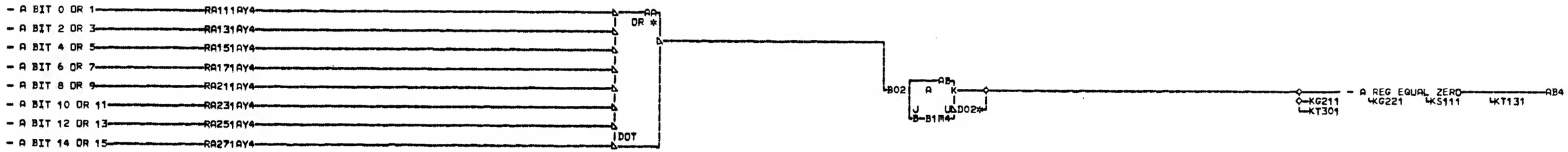

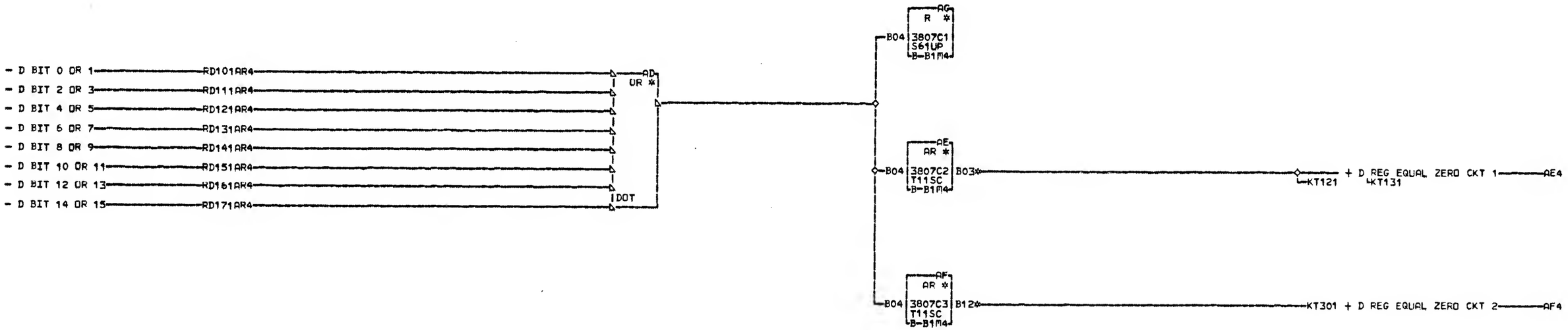

KU101
000

AB4 B-B1A4D04
01B-A1N4D04
AE4 B-B1A4B04
01B-A1N4B04
AF4 B-B1F1A11
01B-A1F1A11

LOC. TYPE
B-B1M4 3807

ACCUMULATOR-A REG EQUAL ZERO
ARITH FACTOR-D REG EQUAL ZERO
—E.C.—HISTORY— MACH.1131-C
FRAME 01
IBM CORP. GPD
DATE LAST EC
02-09-71 571150
P.N. 5889244

KU101 000

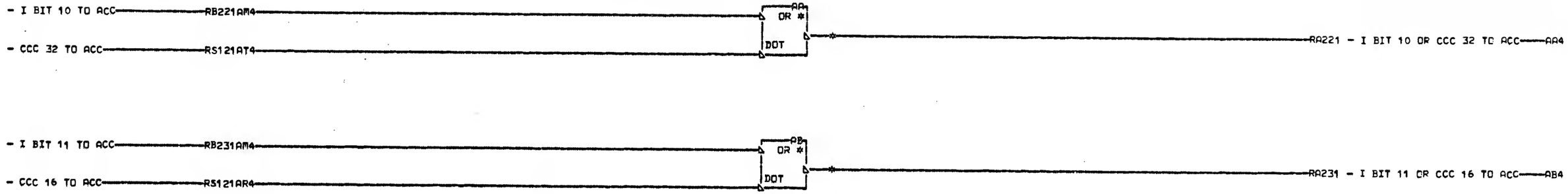

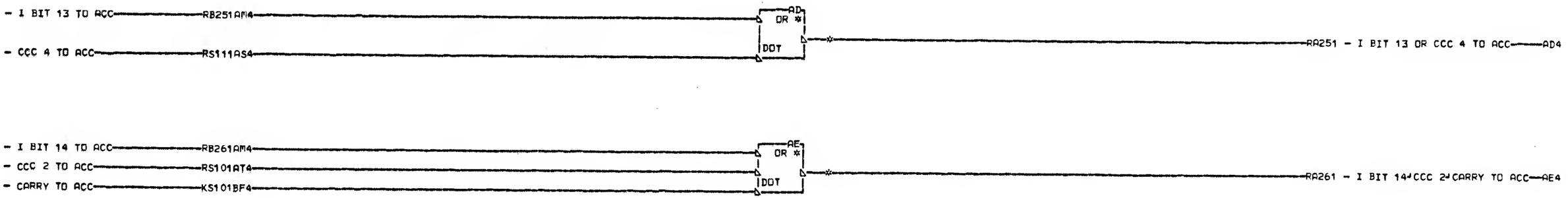

K
U
1
1
1

000

AA4 B-A1N3B11 01B-B1A3B13
01B-B1A3B11 AF4 B-A1N3D13
AB4 B-A1N3D11 01B-B1A3D13
01B-B1A3D11
AC4 B-A1N3B12
01B-B1A3B12
AD4 B-A1N3D12
01B-B1A3D12
AE4 B-A1N3B13

ACC INPUT BUSS - I BITS 10-15
CCC 32-1 CARRY OVERFLOW
E.C.-HISTORY
MACH.1131-C
FRAME 01
IBM CORP. GPD
DATE LAST EC
02-09-71 571150
P.N. 5889245

K
U
1
1
1

000

+ IX ADDR INHIBIT SAR — KU301AT2
+ TAG 7 — RN101AQ2
- TAG 6 — RN101BB6

- TAG 7 — RN101AQ6
+ TAG 6 — RN101BB2

- PARITY STOP — KR111BD4
- DC RESET 2 — KA111AN4

+ PROG START KEY 1 — KT321AX4 — D02
- DELAY — KA111BH4 — B04
+ T7 PWR — KG211BG4 — B05

- T 5 — KC111AK6 — B08
- X 5 — KM111AK6 — D09

+ T 7 — KC111AV2
+ X 7 — KM111AV2

+ IMED STOP KEY — 001 — ZK111

- I2 CYCLE — KD101AT6
- CCC COUNT 0 — RS101AV4
+ T 6 — KC111AQ2

+ DBL WORD ADDRESSING — DN111AV4
+ E GT TURN ON — KD111BC4

+ DIVIDE E — KT101AA4
+ CCC 16 — RS121AN2

+ CCC 1 — RS101AL2

+ CPU STOP LATCH — BB4 — KA101 XP121

- CPU STOP LATCH — AE4 — KA101 KW101

- T7-X7 NOT STOP LATCH — AQ4 — KC101 KC111 KM101 KM111

KB111 - ADD TO STOR SET INTLK SPL — AF4

RN111 - DPW ODD ADDR SET GT — AG4

KT301 + DIV COUNT 16 — AR4

K U 2 0 1 000

AE4 B-A1F8B06 01A-B1N7D09
01B-B1F8B06
AL4 B-A1A2B12
AM4 B-A1A2B13
AN4 B-A1A2D13
AV4 B-A1A5D09
BB4 B-A1A7D09
01A-C1N6D09
01A-C1A7D09

LOC. TYPE
B-A1B4 6212
B-A1C6 0000
B-A1D6 0000
B-A1E4 0002
B-A1E6 3421
B-A1H6 0000
B-A1N7 0000

INDEX ADDR 1+2+3 STOP LATCH
DIV COUNT 16
—E.C.—HISTORY— PCH.1131-C
FRAME 01
IBM CORP. GSD
DATE LAST EC
02-09-71 571150
P.N. 5889246

K U 2 0 1 000

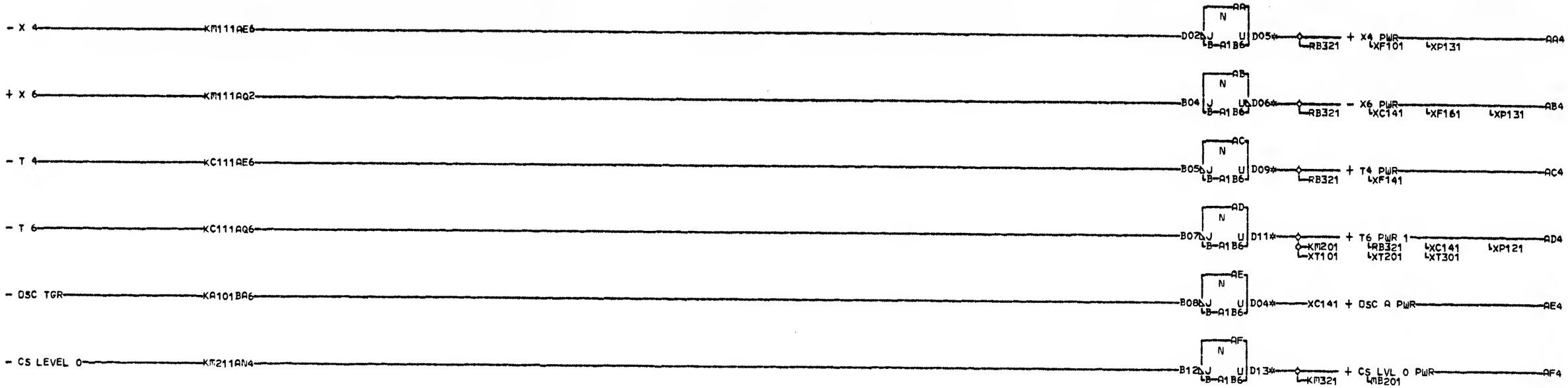

K
U
2
1
1

004
SIM TD PN 5889247 EC 571150

AA4 B-A1A6D12 01A-C1N4B13 01A-C1A6B11
01A-C1N4D12 01A-C1A6B13 01A-B1N6B11
01A-C1A6D12 01A-B1N6B13 AF4 B-A1M8D04
01A-B1N6D12 AD4 B-A1A6B12 01B-B1M8D04
AB4 B-A1A6D13 01A-C1N4B12 AJ4 B-A1A2D12
01A-C1N4D13 01A-C1A6B12 AL4 B-B1F8C06
01A-C1A6D13 01A-B1N6B12 01B-A1F8C06
01A-B1N6D13 AE4 B-A1A6D10
AC4 B-A1A6B13 01A-C1N4D10

LOC. TYPE
B-A1B6 3024
B-A1D6 0000
B-A1E6 3421
B-B1F7 0000

T AND X CLK/OSC AJ PROG LD PWR
WAIT NOT STOR LOAD/DISP
E.C.-HISTORY
MACH.1131-C
FRAME 01
IBM CORP. GSD
DATE LAST EC
03-14-72 571155
P.N. 5889467

K U 2 1 1 004

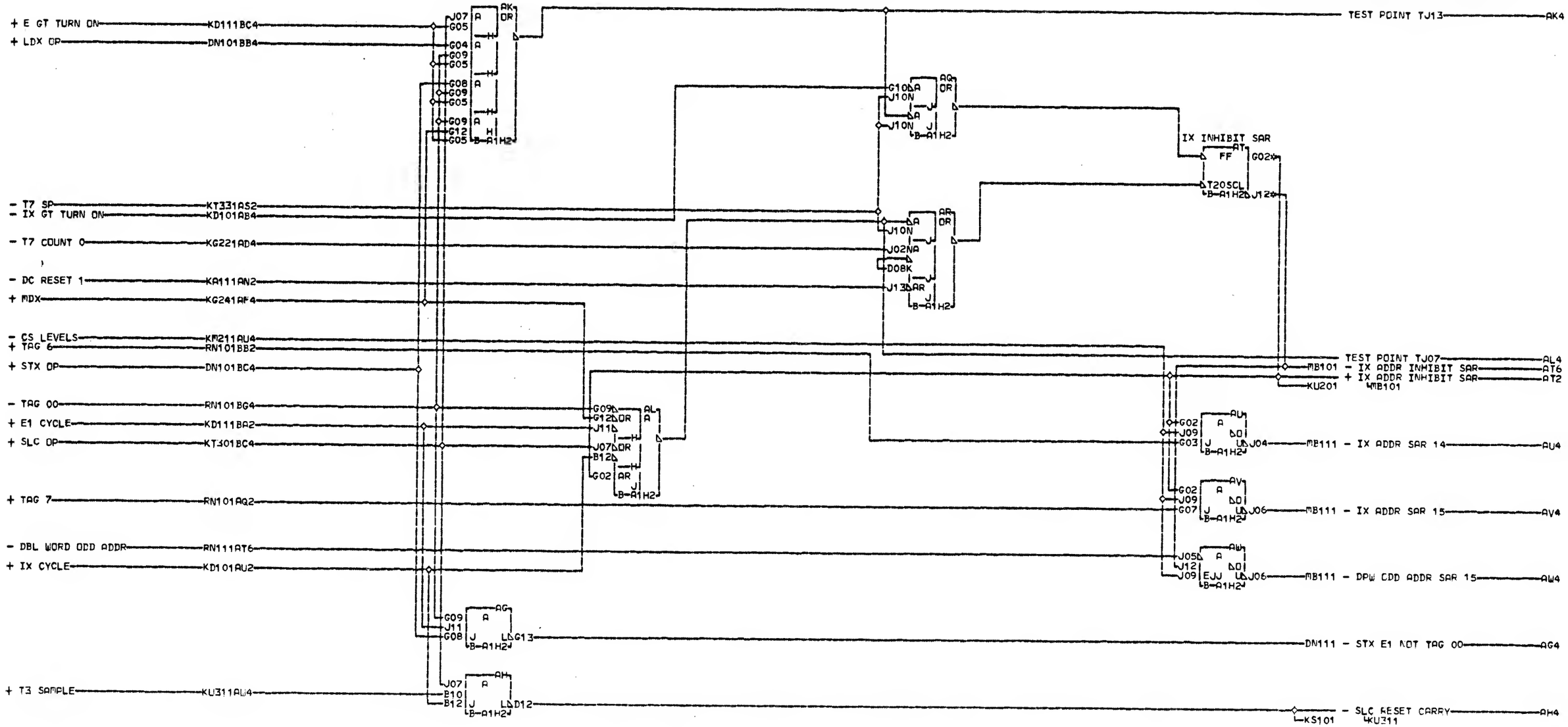

K
U
3
0
1

000

AT2 B-A1F1E09
01B-B1F1E09
AT6 B-A1F1E11
01B-B1F1E11

LOC. TYPE
B-A1H2 6207

IX ADDR INHIBIT SAR STX E1 NOT TAG 00 SLC RESET CARRY	KU301
E.C.-HISTORY	MACH.1131-C
	FRAME 01
	IBM CORP. GSD
DATE LAST EC	000
02-09-71 571150	P.N. 5889248

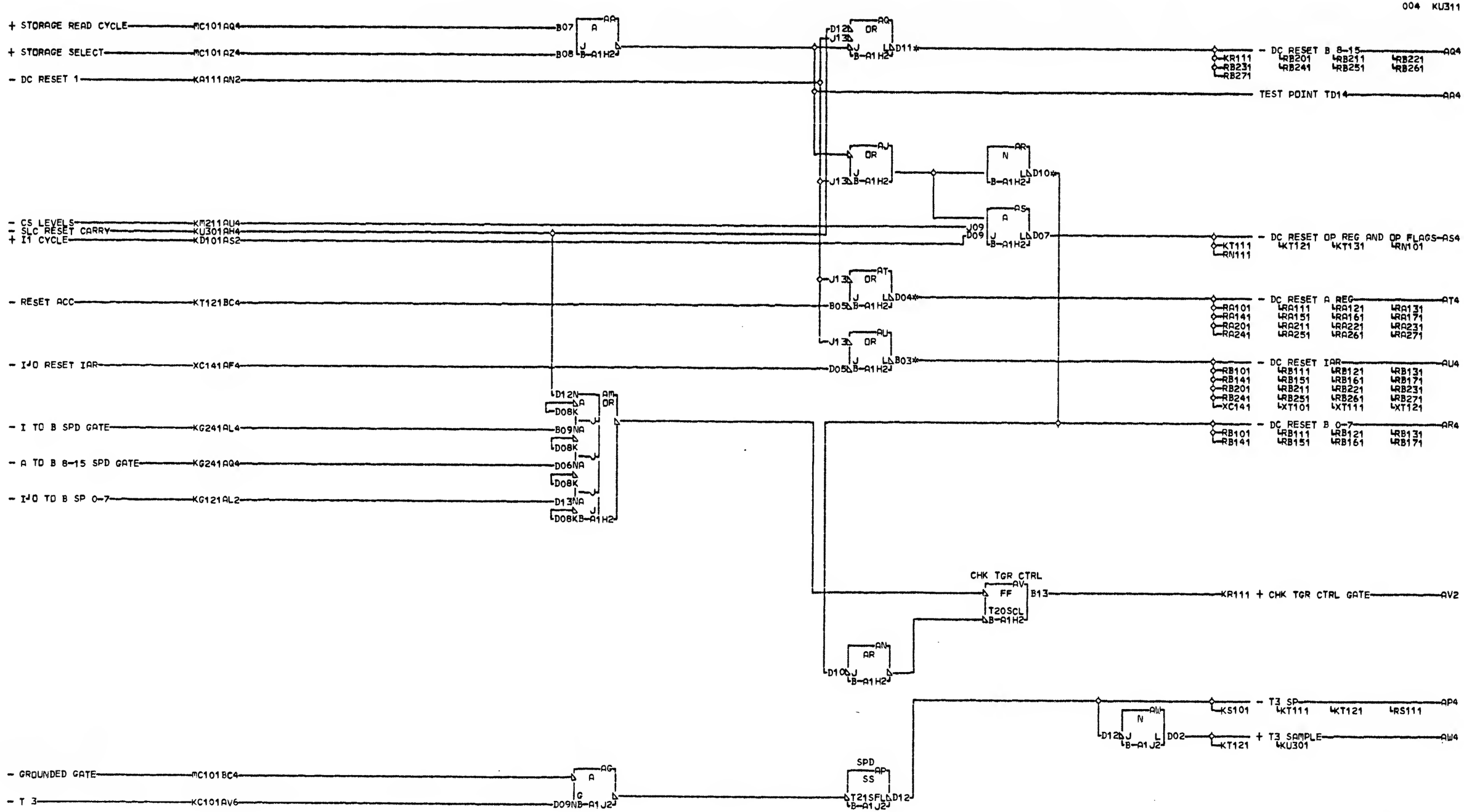
+ STORAGE READ CYCLE
MC101AQ4
+ STORAGE SELECT
MC101AZ4
- DC RESET 1
KA111AN2
- CS LEVELS
KM211AU4
- SLC RESET CARRY
KU301AH4
+ I1 CYCLE
KD101AS2
- RESET ACC
KT121BC4
- I/O RESET IAR
XC141AF4
- I TO B SPD GATE
KG241AL4
- A TO B 8-15 SPD GATE
KG241AQ4
- I/O TO B SP 0-7
KG121AL2
- GROUNDED GATE
MC101BC4
- T 3
KC101AV6
- DC RESET B 8-15
TEST POINT TD14
- DC RESET OP REG AND OP FLAGS
- DC RESET A REG
- DC RESET IAR
- DC RESET B 0-7
CHK TGR CTRL
KR111 + CHK TGR CTRL GATE
- T3 SP
+ T3 SAMPLE
SPD
SS
T21SFL
T20SCL
KU301
AQ4 B-A1N2D12 01A-C1N6D04
01B-B1A2D12 01A-C1A7D03
AR4 B-A1N4D02 01A-B1N7D03
01B-B1A4D02
AT4 B-A1N4B08
01B-B1A4B08
AU4 B-B1A2D13
01B-A1N2D13
01B-A1A7D04
LOC. TYPE
B-A1H2 6207
B-A1J2 7347
REGISTER RESET
PARITY CHECK CONTROL GATE
E.C. HISTORY
MACH.1131-C
FRAME 01
IBM CORP. GSD
DATE LAST EC
03-14-72 571155
P.N. 5889468
SIM TO PN 5889249 EC 571150

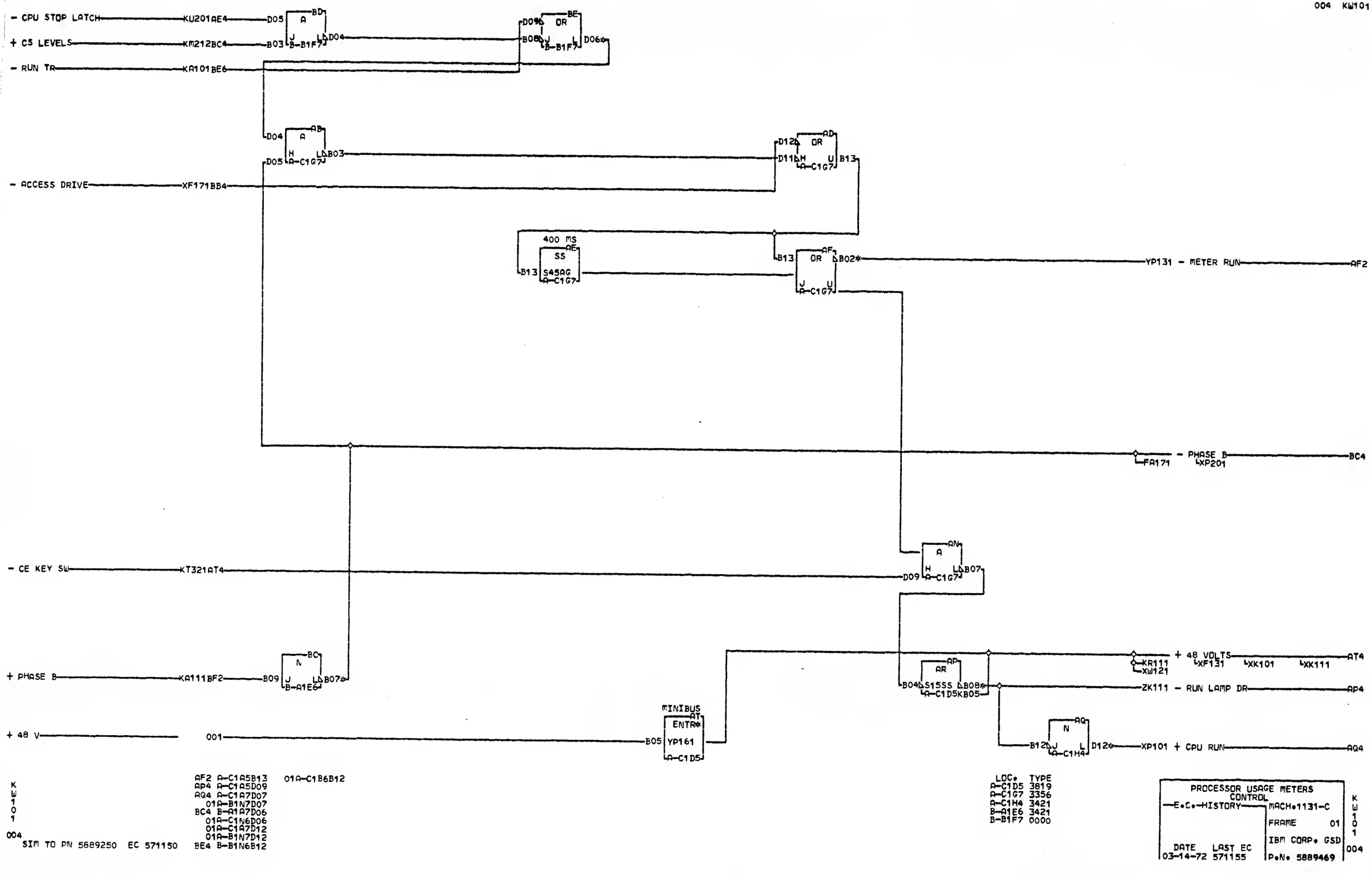

K E 1 0 1 004
SIM TO PN 5689250 EC 571150

AF2 A-C1A5B13
AP4 A-C1A5D09
AQ4 A-C1A7D07
01A-B1N7D07
BC4 B-A1A7D06
01A-C1N6D06
01A-C1A7D12
01A-B1N7D12
BE4 B-B1N6B12
01A-C1B6B12

LOC.	TYPE
A-C1D5	3819
A-C1G7	3356
A-C1H4	3421
B-A1E6	3421
B-B1F7	0000

PROCESSOR USAGE METERS CONTROL
E.C. HISTORY
MACH 1131-C
FRAME 01
IBM CORP. GSD
DATE LAST EC
03-14-72 571155
P.N. 5889469

K E 1 0 1 004

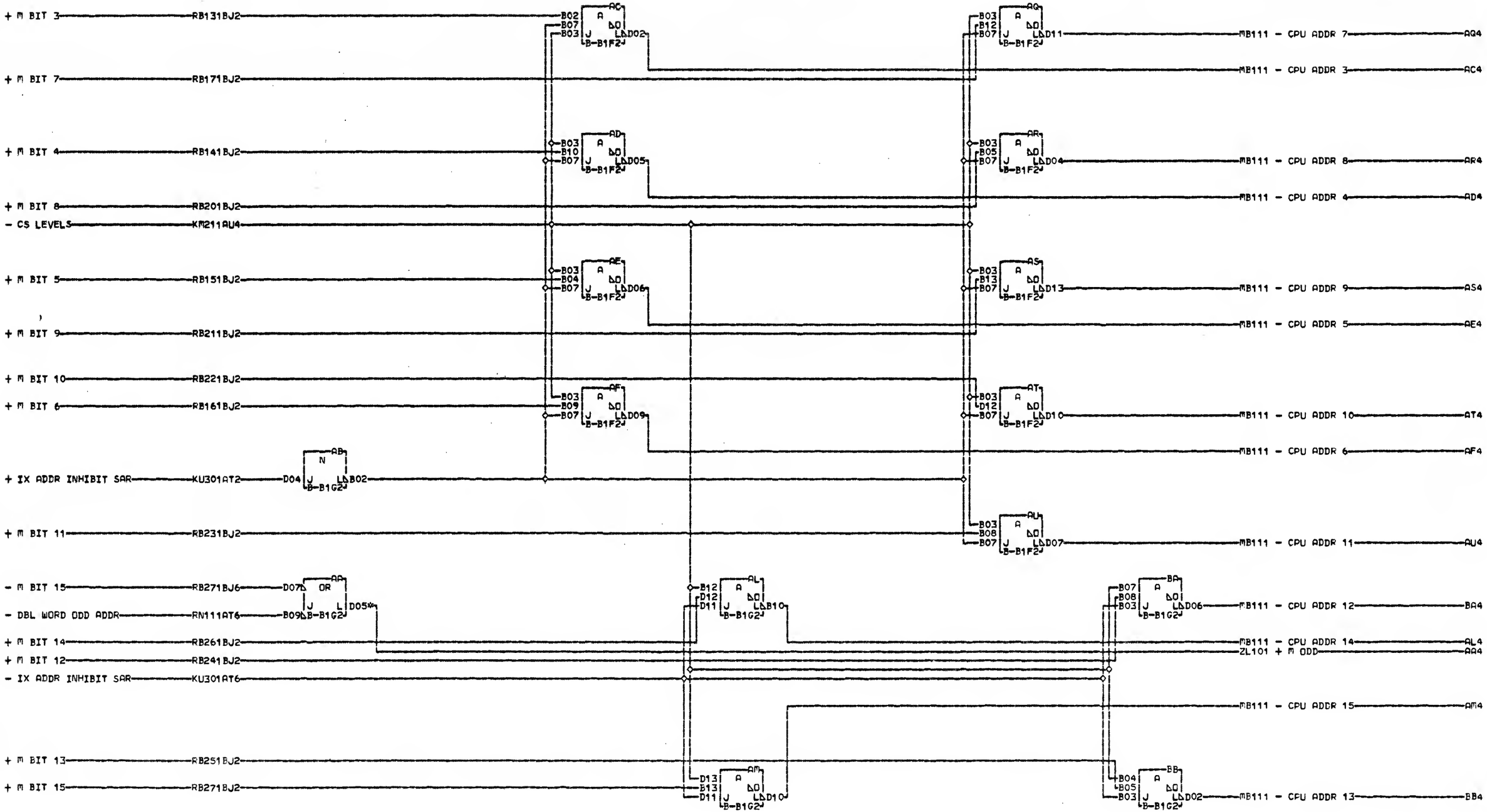

AA4 B-B1M2D10

LOC. TYPE
B-B1F2 3016
B-B1G2 0533

STORAGE ADDR BUS
E.C.-HISTORY
MACH.1131-C
FRAME 01
IBM CORP. GSD
DATE LAST EC
02-09-71 571150
P.N. 5889251

M B 1 0 1 000

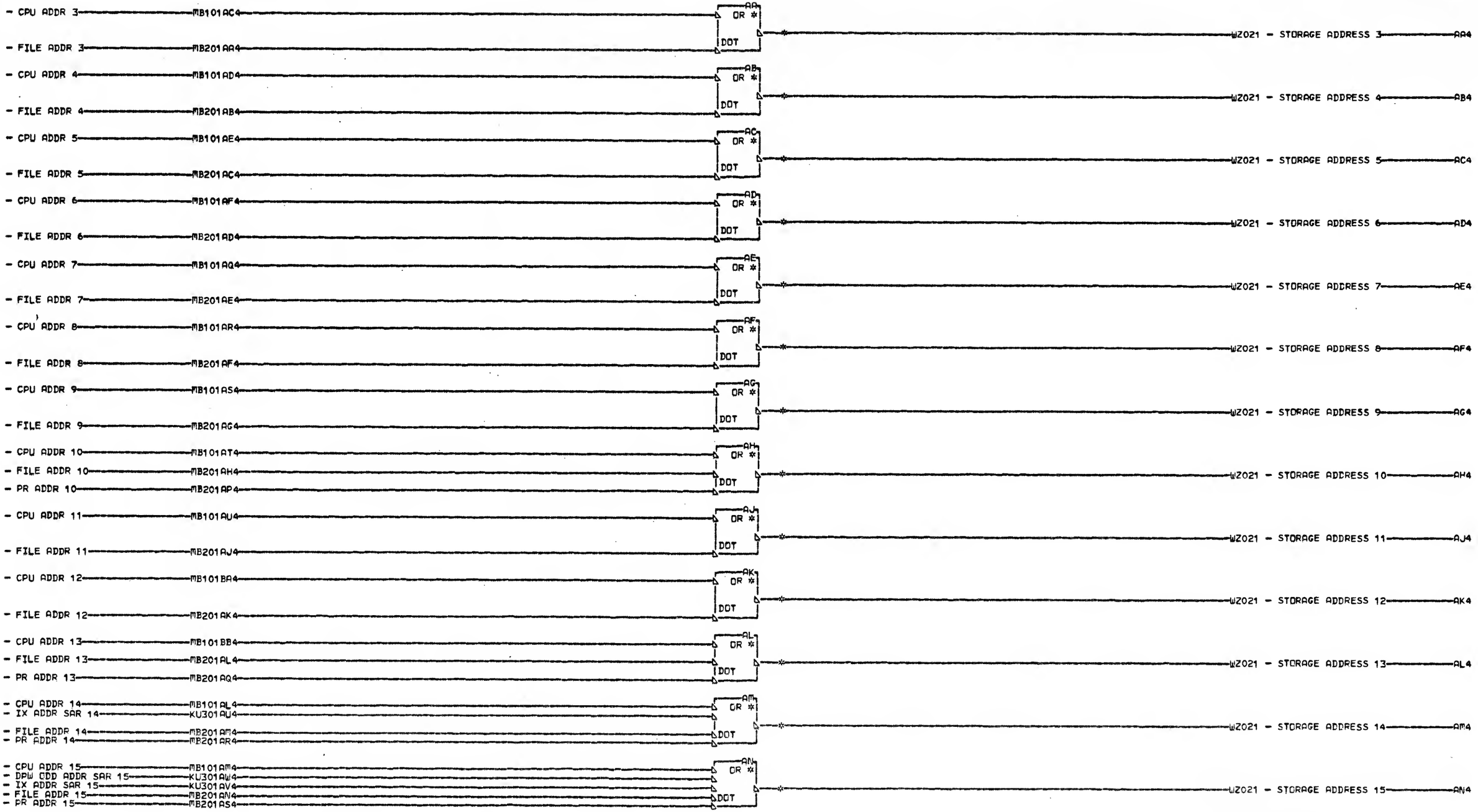

M B 1 1 1

000

AA4 B-B1H1A09 01B-C1H1C11 01B-C1J1D11 01B-B1G1A11
01B-B1G1E09 AE4 B-B1H1C09 01B-C1J1A11 01B-B1K1A11
01B-C1H1A09 01B-C1H1C09 AJ4 B-B1J1D09 01B-C1K1A11
01B-C1G1E09 AF4 B-B1J1C11 01B-C1J1D09 AN4 B-A1G1A09
AB4 B-B1H1B11 01B-C1J1C11 AK4 B-B1J1E11 01B-B1G1A09
01B-C1H1B11 AG4 B-B1J1C09 01B-C1J1E11 01B-B1K1A09
AC4 B-B1H1B09 01B-C1J1C09 AL4 B-B1J1E09 01B-C1K1A09
01B-C1H1B09 AH4 B-B1J1D11 01B-C1J1E09
AD4 B-B1H1C11 01B-B1J1A11 AM4 B-A1G1A11

STORAGE ADDRESS ASSEMBLY		
E.C.-HISTORY	MACH.1131-C	M B 1 1 1
	FRAME 01	
	IBM CORP. GSD	000
DATE LAST EC 02-09-71 571150	P.N. 5889252	

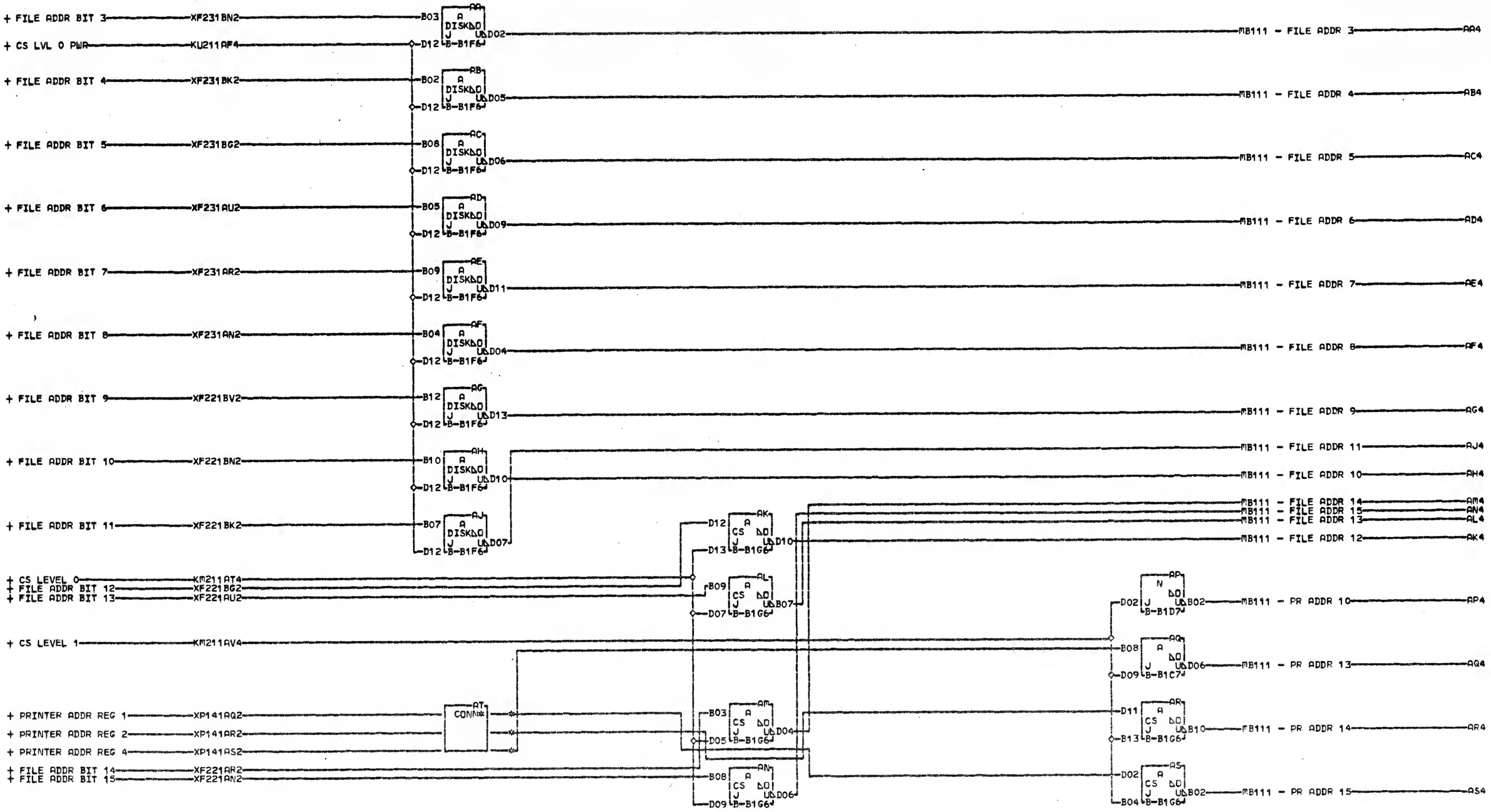

AT2 B-B1G8E06
01 B-B1H8A04
AT4 B-B1H8A06
AT6 B-B1H8B06

LOC.	TYPE
B-B1C7	0236
B-B1D7	0238
B-B1F6	3028
B-B1G6	0236

FILE PRINTER ADDR BUS
E.C. HISTORY
MACH 1131-C
FRAME 01
IBM CORP. GSD
DATE LAST EC
02-09-71 571150
P.N. 5889253

MB201 000

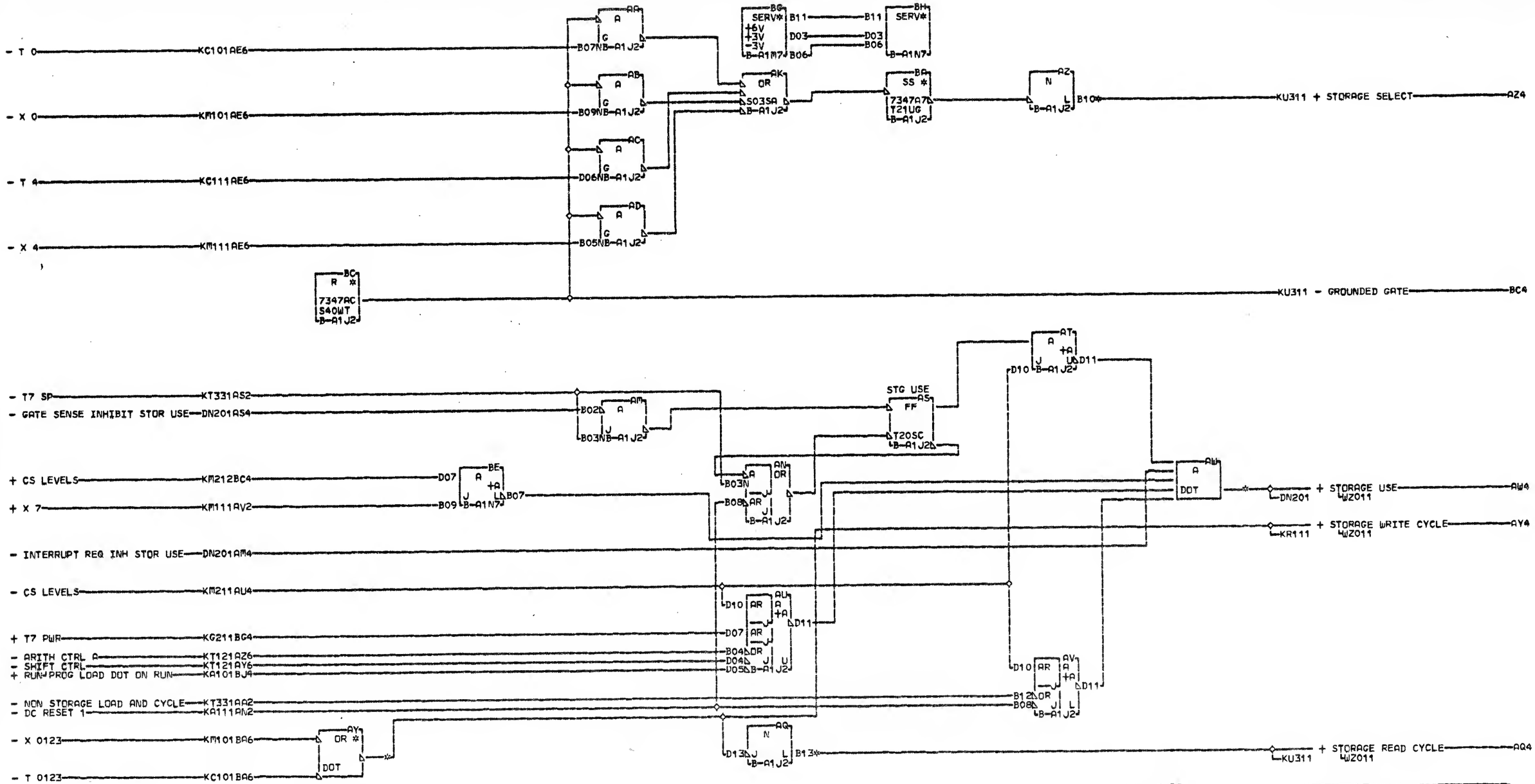

AQ4 B-A1E1E11
01B-B1E1E11
01B-B1H1E11
01B-C1H1E11
AW4 B-A1F1B11
01B-B1F1B11
01B-B1J1B11
01B-C1J1B11
AY4 B-A1D1E11
01B-A1E1D11
01B-B1E1D11
01B-B1D1E11
01B-B1H1D11
01B-B1G1E11
01B-C1G1E11
01B-C1H1D11
AZ4 RESISTOR
B-A1J2B10